TOWARDS A SYSTEM OF SOCIAL AND DEMOGRAPHIC STATISTICS

1989

UNITED NATIONS

ST/ESA/STAT/SER.F/18

DEPARTMENT OF ECONOMIC AND SOCIAL AFFAIRS
STATISTICAL OFFICE

STUDIES IN METHODS Series F No. 18

TOWARDS A SYSTEM OF SOCIAL AND DEMOGRAPHIC STATISTICS

UNITED NATIONS
New York, 1975

NOTE

Symbols of United Nations documents are composed of capital letters combined with figures. Mention of such a symbol indicates a reference to a United Nations document.

ST/ESA/STAT/SER.F/18

UNITED NATIONS PUBLICATION

Sales No. E.74.XVII.8

Price: $U.S. 9.00

(or equivalent in other currencies)

PREFACE

This publication is a comprehensive technical report on the progress thus far attained in the design and delineation of a system of social and demographic statistics. It is issued on the recommendation of the Statistical Commission at its seventeenth session.[1] The Commission considered that the publication would be a valuable source of information on the results of the work to date on a system of social and demographic statistics and would provide a useful basis for carrying this work forward. There are many demands for such easily accessible information. The results of the work on a system are scattered through a number of documents, copies of most of which are no longer available.

This document consists of three parts. Part One deals with the system as a whole—its objectives, scope, design and organization, social accounting and analytical techniques, and sources of basic data. Part Two concerns the individual sequences and subsystems of the system—their purposes and definition, basic series and classifications, and social indicators. Part Three consists of examples of the use of the data and social accounting and analytical techniques of the system. This report reflects the comments of the Expert Group on a System of Social and Demographic Statistics at its second session (ST/STAT.69), on a preliminary version and the results of further work on the system, in particular part three of the document, during the remainder of 1973.

Since the end of 1973, concerted work has been conducted on the social indicators of a system of social and demographic statistics. As a result, the series of social indicators presented in the tables of part Two of this report have been clarified, modified and extended in a number of instances. The new proposed series of social indicators are set out and discussed in the document "System of social and demographic statistics (SSDS), draft guidelines on social indicators" (at this juncture, ST/ESA/STAT.76, United Nations, New York, 1975, mimeo.).

This publication was prepared by Professor Richard Stone as consultant to the United Nations. While the proposed system of social and demographic statistics reflects the comments of the Statistical Commission, of the regional conferences of statisticians and of national statistical authorities on the work of delineating the system during the last four years, it has not yet been adopted as a set of international guidelines by the Commission or any of the regional conferences. This document should none the less be of interest and value to national statistical authorities in their efforts to organize, improve and expand social, manpower and demographic statistics. As the United Nations Expert Group emphasized at its second session, national experiments on the usefulness and feasibility of the proposals made in this document would also be a major practical step in developing suitable international guidelines on a system of social and demographic statistics. The Statistical Office of the United Nations will very much appreciate receiving information on any efforts to apply the proposed system, in part or in whole, and comments on this document.

[1] *Official Records of the Economic and Social Council, Fifty-fourth Session, Supplement No. 2*, para. 117 (ii).

CONTENTS

Part One. The System as a Whole

	Page
I. INTRODUCTION	
A. Some general questions	3
1. What is a system?	3
2. The SSDS and the report	3
3. Scope and coverage	4
4. Types of information	4
5. Connexions	5
6. The *a priori* and the empirical in system-building	5
7. Uses and users of the system	5
8. Differences in circumstances and in priorities	6
9. Guidelines and flexibility	6
10. The time span for completion	6
B. Antecedent discussions	6
II. SCOPE AND COVERAGE	
A. Introduction	7
B. The size and growth of the world's population	7
C. Regional population density and urbanization	8
D. High-level consumption and its growth	8
E. Natural resources and the environment	9
F. Families and households	9
G. Social class, stratification and mobility	9
H. The distribution of income, consumption and wealth	10
I. Housing conditions and neighbourhoods	10
J. Time and leisure	10
K. Social security and welfare services	11
L. Learning activities	11
M. Earning activities	12
N. Health and medical care	13
O. Public order and safety	13
III. THE DESIGN	
A. Social demography	14
1. Births and survivals	14
2. Characteristics and states	15
3. Life sequences	15
4. Vintage or longitudinal tables	16
5. Cross-section or transversal tables with age as the primary criterion of classification	16
6. Cross-section or transversal tables with no subdivision by age	17
7. Some taxonomic questions	17
B. The allocation of time	18
C. Activities and costs	19

Page

D. Recipients and benefits 19
E. Connexions 19
1. Comparison 20
2. Multiple classifications 20
3. Integration 20
F. A diagrammatic presentation of the system 20

IV. THE COLLECTION OF DATA

A. Methods of obtaining data 23
B. Problems connected with different kinds of data 24
1. Data on stocks 24
2. Data on flows 25
3. Longitudinal data 25
4. Integrated data 26
5. Accounting data 26

V. SOCIAL INDICATORS

A. The need for social indicators 27
B. Criteria for defining social indicators 27
C. Methods of constructing social indicators 28
1. Factor analysis 28
2. Index numbers 29
3. Utility and optimization 31
4. Life expectancies 31
5. Public opinion surveys 32
D. Concluding remark 32

VI. NON-MARKET ACTIVITIES

A. Service activities in the SNA 33
1. Educational activities and institutions 33
2. Activity (production) accounts 33
3. Purpose accounts 34
4. Capital expenditure accounts 34
5. Income and outlay and capital finance accounts 34
6. A numerical example 34
B. The production boundary and the output of non-market activities .. 36
1. Input measures of output 37
2. Producer-oriented measures of output 37
3. Consumer-oriented measures of output 37
4. A comparison of the three measures 38
C. Output budgeting (PPBS) 38
1. Objectives 39
2. Activities 39
3. Inputs 39
4. Outputs 39
D. Social costs and benefits 39
1. Costs and benefits to be included 40
2. The valuation of costs and benefits 40
3. Discounting the future 40
4. Risk and uncertainty 40
5. Who gains and who loses? 40

VII. MODELS OF HUMAN STOCKS AND FLOWS

A. Introduction 42
B. A symbolic version of the general stock-flow matrix 42

Page

C. Input-output models based on outflow coefficients (transition proportions) 42
1. Simple quantity models 43
2. Some special cases of the quantity model 43
3. The *C*-matrix as a probability matrix 44
4. Forms of the fundamental matrix 44
5. The price equation 45
6. A fundamental identity 46

D. Input-output models based on inflow coefficients (admission proportions) 46
1. The quantity equation 46
2. The price equation 46
3. The identity 47

E. Other models based on fixed coefficients 47

F. Programming models 47
1. An application of linear programming 47
2. An application of the maximum principle 48

G. Concluding remarks 50

VIII. TIME BUDGETS AND MODELS OF THE ALLOCATION OF TIME

A. The allocation of time 51

B. The technique of time budgets 51

C. Descriptive uses of data from time budgets 51

D. Models of the allocation of time 51

E. Commodities and time 51

F. Allocation and entropy 52
1. Microstates and macrostates 53
2. Activities and times of day 53
3. Constraints 53
4. The entropy model 53
5. Extensions, uses, limitations 54

Part Two. Individual Sequences and Subsystems

IX. THE CONTENT OF PART TWO

A. Individual sequences and subsystems 57

B. The structure of the chapters 57

C. The recommended series and social indicators 58

X. THE SIZE AND STRUCTURE OF THE POPULATION, BIRTHS, DEATHS AND MIGRATION

A. Introduction 59

B. Population boundaries 59

C. Time intervals and starting dates 59

D. Births 60

E. Deaths 60

F. Migration 61
1. International migration 61
2. Internal migration 61

G. Characteristic classifications 62

H. Recommended series 62
1. Indicators connected with population size and composition 63
2. Indicators connected with births and fertility 63
3. Indicators connected with deaths and survival 63
4. Indicators connected with migration 63

Page

XI. FAMILY FORMATION, FAMILIES AND HOUSEHOLDS

A. Introduction 64
B. Married couples, marriage and divorce 64
C. Families 64
D. Households 64
E. Stock-flow matrices for individuals, families and households 65
1. Individuals 65
2. Families 65
3. Households 65
F. Characteristic classifications 66
1. Year of marriage 66
2. Marriage and remarriage 66
3. Number of children 66
4. Size and composition 66
5. National or ethnic origin 66
6. Religion 66
7. Urban or rural area 66
8. Sector 66
9. Purpose 66
10. Size 66
11. Denomination 67
G. Recommended series 67
1. Indicators connected with married couples, marriages and divorces 68
2. Indicators connected with families 68
3. Indicators connected with households 68

XII. SOCIAL CLASS, STRATIFICATION AND MOBILITY

A. Individuals and classes 69
B. The dimensions of class 69
1. Family connexions 69
2. Occupational prestige 70
3. Income and wealth 70
4. Education 70
5. Ethnic origin 70
6. Religion 70
7. Power 70
C. The evaluation of status 70
1. Objective status 70
2. Accorded status 70
3. Subjective status 70
D. Social stratification and mobility 71
E. Social mobility as a stochastic process 71
F. Intergenerational mobility 71
G. Intragenerational mobility 72
H. Classifications 72
1. Family background 73
2. Occupational prestige 73
3. Income and wealth 73
4. Education 73
5. A synthetic indicator of social class? 73

Page

I. Recommended series 74
1. Indicators connected with social class 74
2. Indicators connected with social stratification 75
3. Indicators connected with social mobility 75

XIII. THE DISTRIBUTION OF INCOME, CONSUMPTION, ACCUMULATION AND NET WORTH

A. Introduction 76
B. The system of distribution statistics 76
C. The net worth of the household sector 76
D. The dynamics of income formation 76
E. Classifications 77
1. Size of primary income 77
2. Size of distributed factor income 77
3. Size of available income 77
4. Size of saving 77
5. Age and sex 77
6. Socio-economic class 77
7. Kind of economic activity and occupation 77
8. Educational attainment 77
9. Number of earners 77
10. Size of household 77
F. Recommended series 77
1. Indicators connected with the income of individuals and households 78
2. Indicators connected with final consumption expenditure and the total consumption of households 78
3. Indicators connected with saving, the possession of consumer durables and net worth 79

XIV. HOUSING AND ITS ENVIRONMENT

A. Introduction 80
B. The housing stock 80
C. Environmental characteristics and the role of urban data banks ... 81
D. The housing conditions of the population 81
E. Housing services and finance 81
F. Characteristic classifications 81
1. Type of dwelling 82
2. Condition and facilities 82
3. Size 82
4. Occupancy 82
5. Tenure 82
C. Recommended series 82
1. Indicators connected with the housing stock, new construction etc. 82
2. Indicators connected with the housing conditions of the population 82
3. Indicators connected with housing services and finance 84

XV. THE ALLOCATION OF TIME AND THE USE OF LEISURE

A. Introduction 85
B. Accounting for time 85
1. The allocation of time over the day 85
2. The allocation of time over the week, month or year 85
3. The allocation of time over the life span 86
4. Time: a quantity or a price? 86

Page

C. The measurement of free time 86
D. Leisure activities 86
1. Holidays 86
2. Cultural activities 86
3. Sporting activities 87
4. Other leisure activities 87
E. Facilities and personal expenditures 87
1. Land use 87
2. Clubs and social organizations 87
3. The transport network and transport facilities 87
4. Major consumer durables 87
5. Consumers' expenditure connected with leisure 87
F. Characteristic classifications 87
1. The use of time 87
2. Typical periods 88
3. Leisure activities 88
4. Facilities and equipment 88
G. Recommended series 88
1. Indicators connected with the use of time and its allocation to leisure activities 89
2. Indicators connected with facilities for leisure 89
3. Indicators connected with expenditure for leisure 89

XVI. SOCIAL SECURITY AND WELFARE SERVICES

A. Introduction 90
B. Boundaries: social security and welfare services in the SNA 90
C. Private welfare services 90
D. Social security and public welfare services 90
E. Characteristic classifications 91
1. Type of social security provision 91
2. Type of public assistance 91
3. Type of welfare service 91
4. Reason for assistance or service 91
5. Duration of receipt 91
6. Size of benefit 91
F. Recommended series 91
1. Indicators connected with the number eligible for and in receipt of benefit 91
2. Indicators connected with revenues and expenditures 91

XVII. LEARNING ACTIVITIES AND EDUCATIONAL SERVICES

A. Introduction 93
B. Educational boundaries 93
C. Stocks and flows of students 94
D. Inputs and outputs of educational services 94
E. The educational attainments of the population 94
F. Characteristic classifications 94
1. The International Standard Classification of Education 94
2. Establishments 95
3. Areas and subjects of study 95
4. Grades 95
5. Tests and qualifications 96
6. Full-time and part-time education 96
7. Curricula, teaching methods, size of classes 96
8. Administrative categories 96

Page

G. Recommended series 96
1. Indicators connected with pupils and students 98
2. Indicators connected with inputs and outputs 98
3. Indicators connected with the educational attainments of the population 99

XVIII. Earning activities, employment services and the inactive

A. Introduction 100
B. The production boundary 100
C. The economically active population 100
D. Employment and unemployment 101
1. Definition of employment 101
2. Full-time, part-time and spare-time employment 101
3. Definition of unemployment 101
4. Employment and unemployment in the active sequence 102
5. Employment in relation to output and productivity 102
6. Labour mobility 102
E. Conditions of work 102
1. Hours of work 102
2. Industrial accidents, injuries and disability 103
3. Physical and psychological conditions 103
4. Profit-sharing, co-partnership, participation in management 103
5. Wage rates and earnings 103
6. Contributions and benefits 104
7. Income from employment and self-employment in the SNA 104
8. Industrial unrest and conflict 104
F. Employment services 104
1. Employment exchanges 104
2. Industrial retraining and manpower programmes 105
G. The economically and educationally inactive 105
1. Children outside the school system 105
2. The unoccupied 105
3. The retired 105
4. The inmates of institutions 105
H. Characteristic classifications 105
1. Kind of economic activity 105
2. Occupation 106
3. Industrial status 106
4. Educational qualifications 106
5. Duration of unemployment 107
6. The recording of part-time economic activity 107
I. Recommended series 107
1. Indicators connected with the economically active, employment and unemployment 110
2. Indicators connected with conditions of work 110
3. Indicators connected with employment services 111
4. Indicators connected with the inactive 111

XIX. Health and health services

A. Introduction 112
B. Boundaries: health services in the SNA and other problems 112
1. Health services in the SNA 112
2. Overlaps with other parts of the system 113
3. Planning health services 113
4. Aetiology and treatment 114

Page

C. The general state of health 114
D. The use of health services 114
E. The facilities available for health services 114
F. Revenues and expenditures connected with health services 114
G. Characteristic classifications 115
1. Conditions of health 115
2. Diseases 115
3. Treatments 115
4. Incapacity 116
5. Medical practitioners, nurses and other staff, and their specializations 116
6. Medical establishments 116
H. Recommended series 116
1. Indicators connected with the general state of health 116
2. Indicators connected with the use of health services 119
3. Indicators connected with the facilities available for health services 119
4. Indicators connected with revenues and expenditures 119

XX. PUBLIC ORDER AND SAFETY, OFFENDERS AND THEIR VICTIMS

A. Introduction 120
B. Boundaries 120
C. Offences 121
D. Persons cautioned, charged and convicted 121
E. Persons in centres of detention and on probation 121
F. Victims, their injuries and their losses 121
G. Facilities etc. for public order and safety 121
H. Criminal activities and their predisposing conditions 121
I. Characterstic classifications 122
1. Early-warning indicators 122
2. Offences 122
3. Gravity of offence 122
4. Treatment of offenders 122
5. Institutions 122
6. Incapacity 122
7. Victims 122
8. Loss, damage and injury 122
J. Recommended series 122
1. Indicators connected with offences 124
2. Indicators connected with persons cautioned, charged and convicted 125
3. Indicators connected with persons in centres of detention and on probation 125
4. Indicators connected with victims, their injuries and their losses 125
5. Indicators connected with facilities etc. for public order and safety 125

Part Three. Examples and Applications

XXI. THE CONTENT OF PART THREE

A. Introduction 129
B. Reasons for providing examples in the present case 129
C. The chapters which follow 129

Page

XXII. EXAMPLES RELATING TO THE SIZE AND STRUCTURE OF THE POPULATION, BIRTHS, DEATHS AND MIGRATION

A. Introduction 130
B. The matrix of fertility and survival 130
C. One thousand girls and their progeny 130
D. The decomposition of the A-matrix 133
E. Fertility and the rate of increase of a population 133
F. Mortality and the expectation of life 134
G. Two links between demography and economics 134
H. Migration: data and models 135

XXIII. EXAMPLES RELATING TO FAMILY FORMATION, FAMILIES AND HOUSEHOLDS

A. Introduction 138
B. The marital status transition matrix 138
C. Extensions of the simple model of fertility and survival 139

XXIV. EXAMPLES RELATING TO SOCIAL CLASS, STRATIFICATION AND MOBILITY

A. Introduction 140
B. The influences on socio-economic status 140
C. Social mobility 141

XXV. EXAMPLES RELATING TO THE DISTRIBUTION OF INCOME, CONSUMPTION, ACCUMULATION AND NET WORTH

A. Introduction 144
B. The process of income formation 144
C. Factors influencing individual incomes 146
D. The redistribution of income 147

XXVI. EXAMPLES RELATING TO HOUSING AND ITS ENVIRONMENT

A. Introduction 149
B. The occupancy transition matrix 149

XXVII. EXAMPLES RELATING TO THE ALLOCATION OF TIME AND THE USE OF LEISURE

A. Introduction 151
B. The Time-Budget Project 151
1. The general picture 151
2. The household economy 151
3. The use of free time 153
C. Students' daily activities 154

XXVIII. EXAMPLES RELATING TO SOCIAL SECURITY AND WELFARE SERVICES

A. Introduction 156
B. The macro-economic impact of social security 156
C. The distributional impacts of Medicare and Medicaid 156
D. The Swedish supplementary pensions scheme 156

XXIX. EXAMPLES RELATING TO LEARNING ACTIVITIES AND EDUCATIONAL SERVICES

A. Introduction 158
B. Stock-flow matrices and projections 158
C. Influences on educational achievement 164
D. Educational output and productivity 166
E. Cross-country studies and comparisons 167

Page

XXX. EXAMPLES RELATING TO EARNING ACTIVITIES, EMPLOYMENT SERVICES AND THE INACTIVE

A. Introduction 169
B. Structure and change in a labour force 169
C. Industrial mobility 169
D. Stationary registers of the unemployed 170
E. Manpower in organizations 171
F. Vacancies and movements of manpower 173

XXXI. EXAMPLES RELATING TO HEALTH AND HEALTH SERVICES

A. Introduction 174
B. Referrals in a system of medical care 174
C. The resocialization of geriatric patients 176

XXXII. EXAMPLES RELATING TO PUBLIC ORDER AND SAFETY, OFFENDERS AND THEIR VICTIMS

A. Introduction 177
B. Offence transitions 177
C. Age transitions 180

Annex

LIST OF REFERENCES 181

Part One. The System as a Whole

I. INTRODUCTION

A. Some general questions

1.1. For some years the Statistical Office of the United Nations (UNSO) has been elaborating, with the help of the specialized agencies and regional statistical conferences of the Organization and of the statistical offices of Member Countries, a System of Social and Demographic Statistics (SSDS). The final stage of this endeavour has not yet been reached and in what follows the system is presented as it stood at the end of 1973. This report is thus a statement of progress, designed to indicate the nature of the new proposals before they reach a final form and to provide an opportunity for comment and criticism by a wider circle than the national and international statistical agencies that are participating in their development.

1.2. Before we come to the report itself or even to a brief recital of the steps that have led up to its present stage, there are a number of general issues which constantly arise in discussion and call for some statement at the outset.

1.3. Social and demographic statistics have been collected, in varying degrees of detail, all over the world for a long time; what then is meant by a system in this context and what is its scope and coverage? Having answered this question, how do we set about designing such a system, what types of information should it contain and what kinds of connexion should be provided for; what should we do, in other words, that we are not doing at present? What institutions or individuals is the system intended to serve and in what ways is it intended to serve them? And what is the time span envisaged for the completion of the system? Let us look at these different questions in turn.

1. What is a system?

1.4. According to Webster's dictionary the most general meaning of the word "system" is: an aggregation or assemblage of objects united by some form of regular interaction or interdependence; a natural combination, or organization of part to part, conceived as formed by a process of growth or as due to the nature of the objects connected; an organic whole. The essence of this definition lies in the idea of connectedness. Applied to social and demographic statistics this idea has a number of aspects relating in part to the question of what are to be connected and in part to the kind of connexions that are needed.

1.5. In the first place, a social system is complex and so it is convenient to divide it into parts. This subdivision is usually reflected in the collection and presentation of social and demographic statistics where we find separate bodies of educational statistics, labour statistics, health statistics and so on. But these separate collections of data do not form a system because insufficient provision is made for various kinds of connexion within the different parts and very little is made for any connexions between them.

1.6. In the second place, a social system and its parts require for their description information of a number of different kinds: individuals and their grouping into families, households, schools, workplaces and so on; economic transactions and stocks, expressible in current or constant prices or in physical units; time, which may or may not be at the disposal of the individual; and location, which can be thought of either in terms of regions or in terms of areas of different population density. For a systematic treatment it is usually necessary to make connexions both within and between types of information. For instance, it is not only necessary to connect the flows of students through the branches of an educational system with the stocks of students in these branches at different dates but it is also necessary to connect these human numbers with the economic costs to which their education gives rise.

1.7. In the third place, connexions are not all of the same kind. For instance, in many cases we need integrated stock-flow data which show us exactly how the stocks at the beginning and end of an interval are connected by the flows that take place during the interval; but in other cases it may be sufficient to compare two or more variables classified in the same way.

1.8. Finally, the connexions that have just been mentioned are of a comparatively simple kind. They depend on the use of common concepts, definitions and classifications and can be realized by organizing the data in the form of suitable tabulations. In so far as any constraints have to be satisfied by the entries in the tables, these are all imposed by identities: components must add to totals; accounts must balance; prices and quantities must multiply out to values. Identities are true by definition and if they do not hold in any particular case this only shows that the data are in some way inaccurate and inconsistent. But there are other relationships which are based on assumptions about the way the world works. Such relationships need to be tested and their parameters need to be estimated. Since the data in the system must be useable for a variety of analytical purposes as well as for straightforward description, it is necessary that they should be of such a kind and so organized that they are capable of meeting the requirements of at least the main types of model which are generally considered useful in the different fields of interest.

2. The SSDS and the report

1.9. In the light of the foregoing it can be said that the purpose of the SSDS is to show what data are desirable on human beings, both individually and in groups, and on the institutions with which they are connected and how these data should be organized in order to provide an information system which will be useful for description, analysis and policy making in the different fields of social life. In saying this it must be recognized that different bodies of data are

usually collected by different agencies at different times and using different methods.

1.10. The purpose of this report, then, is: first, to describe such a system, its scope and coverage, the kinds of information to be incorporated and the connexions to be made; and, second, to relate these proposals to sources of data, actual or potential, and to analytical techniques and policy needs.

3. Scope and coverage

1.11. In principle, the system should cover all aspects of social life and, in particular, those which, being a matter of social concern, call for policies to bring about remedial action. A list of topics is discussed in a preliminary way in the next chapter; and part Two of this report is devoted to the topics which are dealt with in some detail.

1.12. As has been said, this is a progress report, not a final statement. There is probably general agreement with the view that the topics dealt with in part Two should be incorporated in any SSDS. It can be argued, however, that there are a number of topics which either do not appear or appear only in a limited and partial way. Many of these were in fact discussed in the course of preparing this report and for one reason or another were left aside at this stage of the development of the system. Let us look at some examples.

1.13. Information about the environment is of obvious importance in connection with the subject matter of this report. Pollution of the air, sea and land and the disturbance of ecological balances are highly relevant to health, to feeding and otherwise providing for the world's rapidly growing population, to the acceptability of policies of unconstrained economic growth and to the choice of the techniques of production. Here, however, no attempt is made to deal fully with the subject though one aspect of it is mentioned in connexion with housing and with the use of leisure. This aspect is confined to land use and transport networks, both of which affect the character of neighbourhoods and are relevant to questions of town expansion and the availability and accessibility of open-air facilities for recreation.

1.14. This limited treatment of the environment is deliberate and is due to the fact that the Statistical Office of the United Nations is undertaking as a separate project the development of a system of environmental statistics (SES). It might be argued that it would have been useful to say something about the links that ought to exist between the SSDS and the SES. This has not been done because the SES has not yet been formulated so that any discussion of links could not be at all precise. The general issues are well described in the immense literature which has grown up on the subject of the environment, for instance in the wide-ranging survey by Ehrlich and Ehrlich (61).[1] Where a relevant system already exists, such as the System of National Accounts (SNA), the necessary links are dealt with in considerable detail.

1.15. Apart from the omission of many aspects of the environment, the topics discussed in part Two include all the areas of fundamental social concern set out in OECD (156) and formulated in the course of that Organisation's work on social indicators and the quality of life. If we look closely at these areas, we find that in several cases a component is included that has no counterpart in this report: satisfaction from learning or from work and confidence in the administration of justice. To these feelings and attitudes others could be added: for instance feelings about privacy. It may be desirable to give more consideration to such elements in the future.

1.16. A third important topic which is not touched on here is politics. The reason is that this complex subject cannot easily be laid out in terms of statistics and quantitative analysis. It is true that much relevant work, especially in the field of conflict, has appeared in the last two generations, for instance: Lotka (130) and Volterra, (272, 273) in biology; Neumann and Morgenstern (147) in economics; and Richardson (177, 178) in foreign politics and the phenomenon of arms races. Many other examples could be given and a recent account of the position, with a number of illustrative studies, is set out in Alker, Deutsch and Stoetzel (6). It seems reasonable to suppose that the next two decades will see considerable advances in the application of quantitative methods to political problems.

4. Types of information

1.17. The main types of information with which this report is concerned were mentioned in paragraph 1.6 above.

1.18. Information on stocks and flows of individuals and groups of individuals are organized in a standard matrix form which enables the state of an individual or group at a particular time (a stock concept) to be connected with changes of state (a flow concept). The same standard form can be applied in any field for which we require consistent information on the changing distribution of human numbers over states and, by standard methods, projections can be made of the future distributions that would arise on various assumptions. This kind of information is needed in analysing changing conditions and in planning social services such as education or health.

1.19. Economic information is needed in two main areas: the provision of social services and the distribution of their benefits. Information on inputs and their costs is organized in a standard accounting form obtained by extending the relevant categories of the SNA as set out by the UNSO (255). Information on the distribution of benefits is organized on the lines suggested by the UNSO (260). Data on inputs and costs are needed in connection with the development and finance of the social services; and data on the distribution of benefits are needed in connection with policies to reduce inequalities and to relieve poverty arising from various causes.

1.20. For many purposes sufficient can be learnt about the activities in which individuals are engaged by classifying them by their main activity. But there is a limit to this since people devote only a comparatively small part of their time to their main activity and the other activities in which they engage are only partially under their control. For instance hours of work have tended to fall in recent decades but this does not imply more leisure because the reduction in working time may be offset by an increase in the time taken in travelling between home and workplace. Information on this subject can be organized in terms of time accounts which show in detail how the time

[1] Numbers within parentheses refer to the numbered entries in the list of references contained in the annex to this publication.

available in the day, the week or some longer period is used. Most of the systematic work in this area takes the form of daily accounts usually referred to as time budgets. Data on the allocation of time are needed to appreciate: the immense amount of economic activity that goes on in households, though it is not recorded in the national accounts, and the gradual mechanization of this activity; the extent to which shorter hours of work and labour saving devices in the home are in fact accompanied by greater leisure for family members; the ways in which leisure is used and the demand for goods and services that these uses imply; and much else besides.

1.21. Regional information is sometimes regarded as a fourth type of information and there is no doubt that special problems arise, which are not encountered at the national level, if records are to be kept for small areas. At the same time much useful regional information can be obtained simply by subdividing national totals. Although use is made of regional classifications, the detailed discussion of regional problems is here deferred, as in the case of the SNA, for later consideration.

5. Connexions

1.22. The various kinds of information in the different parts of the system need to be connected in many ways.

1.23. The division of the system into sequences and subsystems, as in part Two of this report, is undertaken for practical reasons. Whatever set of elements we consider, we should expect to find some degree of connectedness; but we can also find subsets whose elements are more closely connected with one another than they are with other elements in the whole set. If we can identify subsets and if, like the educational system or the health system, they follow in the main broadly separate institutional lines, we are in a relatively favourable position since many of the uses of the system as a whole can be met from data restricted to individual subsystems. As a consequence, we can begin by treating the subsystems separately and then go on to consider where they need to be linked and how these connexions should be made. Conceptually, the links between subsystems are no different from the links within subsystems; but, in practice, the former are likely to prove the more difficult because they are potentially very numerous and the critical ones are not easy to discern in the absence of research which in many cases has not been undertaken.

1.24. Connexions require, in the first place, that the relevant data are collected with the help of uniform definitions and common classifications. For instance, if we want to see how stocks at two successive dates are modified by the flows in the interval between them, we must collect information on flows since these, being the elements of a matrix, cannot in general be inferred from the two marginal vectors in which the information on stocks can be arranged. Further, we must ensure that the definition of age, essentially year of birth, is used in collecting flow information as well as in collecting stock information. If we wish to connect demographic and economic information we must ensure that the two kinds of information are classified consistently.

1.25. A second requirement, which allows more complicated connexions to be made, is that individuals can be cross-classified by a number of present characteristics. It should be comparatively easy to arrange for this within a single statistical collection: for instance, it is not difficult to classify school children by age, region and level of education. It is much more difficult to do this generally since what is implied is either an extended collection or the practicality of record linkage. The problem becomes still more difficult if the characteristics come from different parts of the whole system. For instance, it may be quite easy to expand the educational characteristics recorded in a census of schools but virtually impossible to introduce into such a census characteristics relating to social class, family income or health.

1.26. In still more complicated cases it is necessary to be able to cross-classify individuals by past as well as present characteristics. This requires longitudinal data, that is records which trace through time the changing states of a given set of individuals.

6. The *a priori* and the empirical in system-building

1.27. It is not a simple matter to organize the mass of material that has been described into a coherent and relevant system. Two approaches to system-building, the *a priori* and the empirical, have been explored at the meetings which have led up to the present report. According to the first approach, one should try at the outset to get the ultimate form of the system into as clear a focus as possible and only then consider the various compromises and limitations imposed for the time being by our lack of knowledge and understanding. According to the second approach, one should build out from the knowledge and understanding one has, looking, to be sure, as far forward as one can but not expecting to see at all clearly more than one or two moves ahead. Evidently, there is something to be said for each of these approaches. The first helps us to avoid an unduly restrictive formulation in the early stages which will hamper later developments; the second helps us by enabling us to test our proposals at each stage thus allowing experience to come to the help of imagination and intuition. In doing anything new it is necessary in some measure to part company with convention and tradition, to find a new paradigm; but the ultimate implications of this are usually difficult to foresee.

1.28. The two approaches correspond to two different attitudes of mind and, as a consequence, often appear to be competitive. In reality they are complementary. The choice of where to begin matters little in comparison with the realization that, whatever the starting point, it is necessary to pass back and forth constantly between the two approaches: what exists is too constricting; what might exist is not constricting enough.

7. Uses and users of the system

1.29. The organized collection of data discussed in this report has innumerable uses and it would not be helpful to try to list them in detail. Broadly speaking, the system is intended to help in improving our knowledge of social systems and in working out better social policies. The first kind of use envisaged, therefore, is in connexion with policy formation which should be based on the best knowledge available though it is often necessary to take action on the basis of incomplete knowledge with respect to processes that are not well understood. The second kind of use en-

visaged is in connexion with the research needed to enlarge our understanding of social processes thus providing a firmer basis for social policies.

1.30. In addition to these substantive uses there are also instrumental uses connected with the collection and processing of numerical data. Lists of desirable items of data are useful in reviewing existing arrangements for collecting statistics and in deciding priorities when these arrangements are to be extended. These lists coupled with a discussion of desirable connexions within the system as a whole are useful in deciding on the best methods of collecting, storing and retrieving data.

8. Differences in circumstances and in priorities

1.31. The social problems faced in different countries vary widely and so, accordingly, do the priorities attached to different issues. A system which is developed internationally should cover, as far as possible, problem areas that are recognized anywhere and not restrict itself to problem areas that are recognized everywhere. Thus it is inevitable that topics covered in the report will not be of uniform interest in all countries. For instance, in the world at large, illiteracy is generally regarded as a serious problem but there are many countries which do not suffer very greatly from it; or, again, in many parts of the world regional differences give rise to problems but in other parts they do not. As a consequence, some countries would like to see more said about illiteracy or regionalism while others would like to see less. There is no means of meeting these divergent views; instead, it has to be accepted that any aspect of social life amenable to statistical treatment in which there is fairly general interest ought to be included in the system.

9. Guidelines and flexibility

1.32. In view of what has been said it is clear that an important aim of this report is to provide guidelines, based on the experience of many parts of the world, which will be helpful to countries engaged in developing and systematizing their own social and demographic statistics. Questions of comprehensiveness, uniformity and reporting come at a later stage. If we look at the existing international statistical publications we can see that there is already a large amount of material that can be collated and compared. It is to be hoped that the work embodied in this report will serve to increase the range and improve the accuracy and comparability of this material; but the main purpose of this endeavour is to contribute to a better understanding of social problems and of the means by which they can be resolved.

10. The time span for completion

1.33. This report marks the completion of a very early stage in what, if the experience with the system of national accounts is any guide, is likely to prove a long journey. This view is widely held by those who have commented on earlier drafts and papers to the Statistical Office of the United Nations. For one thing, the scope of the present system is very wide, even in comparison with the system of national accounts which has taken over twenty years to reach its present stage. Added to this, much of the information discussed in this report requires modifications in the existing methods of collection and processing and the development of new methods. It is not to be expected that so many changes can be introduced in a very short time span.

B. Antecedent discussions

1.34. The original version of this report was entitled "An Integrated System of Demographic, Manpower and Social Statistics and its Links with the System of National Economic Accounts" (256). The system there formulated dealt with the recording of human stocks and flows, the accounting for a range of activities, such as educational and health services, the accounting for the benefits, in cash and kind, arising from or received in connection with such services and the links that ought to be made within and between these different compartments. A standard framework was provided within which human stocks and flows could be recorded; and this part of the system was developed in terms of a number of sequences, relating to such aspects of human existence as education, employment and health. Each sequence was defined, the classifications needed to describe it were enumerated, and methods of analysis suited to information drawn up on these lines were set out. The economic accounts of education, health and the like were conceived of as an extension and elaboration of the accounts set up in the United Nations SNA (255). And the accounts relating to benefits followed the general lines proposed by the United Nations Statistical Office (260).

1.35. The original report was discussed in July 1970 by an expert group assembled in Geneva (257), and numerous extensions and improvements were suggested. The programme of work recommended at that meeting was largely adopted by the Statistical Commission at its sixteenth session held in October 1970 (248). In April 1971 a joint meeting was held by the Economic Commission for Europe and the World Health Organization on health and medical care in relation to the system (243, 244). Early in 1971 a report entitled "A System of Demographic, Manpower and Social Statistics: Series, Classifications and Social Indicators" (259) was prepared by the Statistical Office of the United Nations. Apart from extending the original report by including, for instance, chapters on housing and leisure, this document, as its title implies, contains tables of recommended series, classifications and social indicators for most parts of the system. It was discussed by a working group of the Conference of European Statisticians in May 1971 (241); and it, together with the original report, was discussed at a seminar of the Conference of Asian Statisticians in September-October 1971 (240), and by the Conference of African Statisticians in October 1971 (239). Early in 1972 a new version of the report (261) was prepared. This report was discussed by a working group of the Conference of European Statisticians in May 1972 (242). The subject again came before the Statistical Commission at their meeting in November 1972 (249), and was discussed by a working group of the Economic Commission for Latin America in December 1972 (245). A further version of the report (262) was prepared in the winter of 1972-73. This new version was discussed at the second meeting of the Expert Group assembled in New York in April 1973 (263). The present report is an elaborated version of this, revised in the light of the comments made by the Expert Group.

II. SCOPE AND COVERAGE

A. Introduction

2.1. In this chapter a general account will be given of statistical information that would be useful in the study of social conditions and social change in their many aspects. The basic facts to which everything else is related are the size, composition and change of human populations. One can start by imagining a community of a certain size living in an uncontaminated environment. Most of the members of this community between certain ages devote a part of their time to the production of goods. In doing this they are likely at the same time to produce evils, such as a dirty atmosphere. In this simple example, people start with leisure and clean air and give up a part of these in order to obtain food, clothing and so on. The economic problem of this community is to get the amount of leisure, the cleanliness of the atmosphere and the quantities produced of food, clothing etc. into some desirable relationship with one another.

2.2. But this is only the beginning. Improvements in techniques may enable a given area to support a larger population and so the community may grow and at the same time become more densely packed. Advances in medical knowledge may increase the expectation of life and change the age composition of the population. The growth of education may remove considerable numbers of people from the labour force. The institutional arrangements of production and the hazards of life may lead to a highly unequal distribution of income so that poverty, while no longer the general condition, continues to exist in an otherwise plentiful world. In an attempt to deal with this problem a variety of welfare services may be introduced. Differences in personal and family circumstances may add social to economic inequality. To varying degrees at different times and in different places, oppression, discrimination and crime are all to be found.

2.3. This list is only illustrative; let us now run through the different topics in a preliminary way and outline the statistical requirements to which they give rise.

2.4. We shall begin with the size, growth and increasing density of the world's population which, together with the general striving for rising consumption levels, call for ever-rising levels of production and make increasing demands on the natural environment in terms of space, other natural resources and the absorption of pollution. Matters relating to population form an integral part of this system whereas the level of consumption (as opposed to its distribution) forms part of the System of National Accounts and questions of the environment form part of the as yet unformulated system of environmental statistics.

2.5. Most individuals live not on their own but in families and however they arrange themselves they give rise to households. Families differ in size, composition, ethnic origin, religion and so on, and many of these classifications apply to households too. They are also distinguished by belonging to different social classes, and social arrangements may be such that they result in a high degree of social stratification or permit a high degree of social mobility. Families are further distinguished by differences of income and wealth. A knowledge of these characteristics is essential in the formulation of social policies with respect to poverty, equality and mobility.

2.6. There are many influences that affect the conditions of life of families and their members. One of the most important is housing, including not only the physical characteristics of dwelling units but also the neighbourhoods in which they are located and the accessibility of amenities such as open spaces. Other, quite different, influences are: the changing pattern of the demands on time which may increase or diminish the amount of free time at the disposal of family members; the uses to which this free time is put; and the facilities and expenditures needed for its enjoyment. Yet another, quite different, influence is the availability of social security and welfare services which can alleviate various forms of human misfortune.

2.7. At the same time that individuals move through a succession of family groupings, associated with different housing conditions, enjoying more or less leisure and provided with a variety of services ministering to human welfare, they are also involved in other endeavours and other situations. In the early stages of life they are being educated; at a later stage they are engaged in economic activity; at all stages, their health may be a matter of concern to them and their delinquency may be a matter of concern to others. The information needed in respect of these four aspects of life are considered in the final sections of this chapter.

B. The size and growth of the world's population

2.8. According to UNSO (251, 1970 edition) the world's population in 1970 was about 3,600 million, of which nearly half is accounted for by the populations of China, India, the Union of Soviet Socialist Republics and the United States of America. The rise each year in the world's population is about 70 million, implying an annual growth rate of 2 per cent. High rates, around 3 per cent or more, are found in Central Africa, Latin America and South Asia; and low rates, around 1 per cent or less, are found in North America, Europe and Japan.

2.9. The United Nations has published (246) a study of world population prospects as assessed in 1963. This indicated that if the contemporary high birth rates were to continue and be accompanied by a continuing fall in death rates, the world's population would reach a figure of over 7,500 million by the end of the present century. However, fertility rates were so high in some countries that it was not thought they would continue and so, on what were considered more realistic assumptions, a set of low, medium and high projections, about 5,400, 6,100 and 7,000 million respectively, were made for the year 2000. These fig-

ures, though lower than the first and exhibiting a wide range of uncertainty, show formidable increases, ranging from 1,800 to 3,400 million, over the level of 3,600 million in 1970.

2.10. The seriousness of the population problem, though it varies greatly from one part of the world to another, is fairly generally recognized and, in recent years, strenuous efforts to reduce the birth rate have been made, with greater or less success, by both public and private agencies in many countries. Clearly any hopeful future requires, among many other things, the solution of this problem.

2.11. Consideration of this range of problems suggests the importance of the following kinds of statistics:

(*a*) General demographic and vital information on such matters as: the size of the population and its composition by age and sex; births in relation to the age and other characteristics of the mother; age and sex-specific death rates. Such information is, of course, available in many countries but there is considerable room for improvement. It provides a basis for the usual type of population projection in which assumptions, usually based in one way or another on past experience, are made about the future course of fertility and mortality rates.

(*b*) Information which would enable fertility and mortality to be better understood: that is to say on the forces which determine them and on the strength these forces are likely to have in the future. These are clearly research topics but not much headway can be made with them without adequate statistical data.

(*c*) Information on the extent and progress of family planning schemes and measures for population control.

C. Regional population density and urbanization

2.12. The number of people per square kilometre varies greatly from one country to another around an average for the world as a whole of 27. Among the major areas distinguished by the United Nations, low density is found in Oceania, the U.S.S.R., Africa and America, with figures of 2, 11, 11 and 12 respectively, and high density is found in Asia and Europe, with figures of 75 and 94 respectively. In even large, individual countries altogether higher densities are found: for instance, 280 in Japan and 168 in India, among the Asiatic countries; and 324 in England and Wales, 319 in the Netherlands and 317 in Belgium, among the European countries.

2.13. The crude measure just given does not reflect density in the urban sense or indicate the supporting power of a territory's land and resources. A somewhat different measure is provided by the urban ratio: the proportion of the population living in what are deemed to be urban areas. This ratio varies over the greater part of the range from 0 to 1 and is highly correlated with the GNP per head: $r = 0.81$ according to Stone (202). Urbanization has increased rapidly in recent decades. This and the accompanying migration from the countryside have taken place in rich and poor countries alike. The urban growth rate of the last two decades must inevitably fall since, if it did not, according to the calculations of Davis, referred to in Ehrlich and Ehrlich (61), everyone would be a city-dweller in fifty years time and the largest city would contain 1,400 million inhabitants.

2.14. Consideration of this range of problems suggests the importance of the following kinds of statistics:

(*a*) Information on the regional distribution of the population and on population density. In the past, useful information has been collected on the distribution of the population between rural and urban areas, with the latter further subdivided by city size. This method is becoming more difficult to apply as towns spread out into urban agglomerations and join up to form conurbations. In the light of this development, it may be desirable to supplement for statistical purposes the use of administrative boundaries with a uniform grid covering the whole country. The numbers in each square of this grid would provide information on population density and it would be possible to subdivide the squares in regions of high density into smaller squares in order to get a more exact description of particular neighbourhoods. It would also be possible to classify many other kinds of social and economic information in terms of the grid, thus providing a basis for studying the connexions between them.

(*b*) Information on external and internal migration, including a record of the numbers who remain in the same place. Although most countries have some statistics of migration, they are usually incomplete and do not make it possible to work out the consequences of the continuation of existing patterns of migration or to see in any detail how these patterns are changing.

(*c*) Information that would throw light on the economies and diseconomies of city size. At one time there were almost certainly economic advantages in the formation of towns but it is doubtful if the same is true of the giant cities of today. The apparent need to pay cost-of-living bonuses to workers in metropolitan areas suggests that these areas are not economically efficient, but arguments based on their continued growth can be used successfully against arguments based on the quality of life.

D. High-level consumption and its growth

2.15. Most people would like to consume more than they do; and rising consumption levels are among the economic aims of most governments, even if in the short run priority is given to building up an industrial base by means of capital formation. This aim is understandable in countries where a large part of the population is badly housed and undernourished. But the same aim is pursued in countries where a large part of the population has reached at least a modest degree of affluence. It is clear that consumption per head cannot rise indefinitely, indeed that every form of growth is essentially sigmoid rather than exponential. In view of the many pressures on resources and the problems (pollution, congestion and so on) to which high-level consumption gives rise, it is time to examine the effects of different kinds of consumption on the community at large.

2.16. Consideration of this range of problems suggests the importance of the following kinds of statistics:

(*a*) Information on the total consumption of the population and its distribution over different groups in the population. Consumption in this sense means private consumption plus that part of public consumption (educational and health services and the like) which can be allocated to individuals and households.

(*b*) Information about waste and about practices and attitudes that encourage waste.

(*c*) Information on which a study could be based on the good and bad effects, and in particular the external effects, of different types of consumption.

E. Natural resources and the environment

2.17. Growth in human numbers and in material living standards lead to increased production which, given the technologies that are nowadays employed, result in a rapid depletion of many natural resources and to the production of numerous pollutants which are not only disagreeable and dangerous but also, in some cases, on a scale which cannot be absorbed and dissipated by the natural environment.

2.18. The resulting situation is sometimes expressed by saying that the societies in which we live can no longer be regarded, as they have been in the past, as "frontier" societies. By this is meant that "our" society, whoever "we" may be, has a vast world lying outside its frontier which can supply at approximately current prices whatever we demand and cannot supply for ourselves; and furthermore, that there is another frontier over which we can dump anything that is disagreeable to us in the confident expectation that we shall never be troubled by it again. Nowadays, however, the implicit assumptions of this view are both challenged. The growth of world population and consumption levels and the depletion of natural resources contradict the first; and the inability of the natural world to absorb every kind of pollutant poured out on the contemporary scale, contradicts the second. We have to recognize that the earth, its resources and its capacities are limited, that we live in a closed world which is daily becoming more cramped, in a spaceship as Boulding (34) has called it. The economics of a spaceship are very different from those of a frontier society and so are the behaviour patterns permissible in the two cases.

2.19. Consideration of this range of problems suggests the need for several kinds of statistics which will not, however, be dealt with in this report for the reason given in section A.3 of the preceding chapter. Information relating to these problems is clearly relevant to the subject matter of this report and just as links are here suggested at various points with economic statistics so, in the future, it will be desirable to consider links with statistics of the natural environment.

F. Families and households

2.20. In the course of their life individuals pass through a sequence of groupings most of which can be identified as some type of family and all of which can be identified as some type of household. Stock figures show the distributions of individuals over family or household types; and flow figures show in detail how these distributions are modified in each interval of time by the movement of individuals from one type to another.

2.21. In addition to classifying individuals by family or household type it is also useful to classify the families and households themselves in this way.

2.22. Consideration of this range of problems suggests the importance of the following kinds of statistics:

(*a*) Information on the distribution of individuals over different types of family and household and on the flows of individuals between pairs of types. Obvious classifications for families and households are by size and composition, ethnic or national origin, religion and locality. For some purposes it is necessary to concentrate on households in which, for instance, the head is an old-age pensioner or chronically sick, since such households are likely to have special problems.

(*b*) Information of a similar kind but relating to the families and households themselves rather than to their constituent individuals.

G. Social class, stratification and mobility

2.23. An important characteristic of individuals and families which was not mentioned in the preceding section is social class. Although most people are aware of class distinctions, it is not a simple matter to define and measure them. There is fairly general agreement that the subject is best approached by separating out a number of components or dimensions: family background, occupational prestige, income and wealth, education and so on.

2.24. Being dependent on a number of components each of which is capable of almost continuous variation, it might be expected that the different classes would merge imperceptibly into neighbouring classes. However, to an extent which varies from one society to another, it is possible to draw demarcation lines through this continuum and so it makes sense, for example, to speak of an upper, a middle and a lower class. Individuals may or may not attach importance to the characteristics which, in their opinion, separate their class from other classes; those they come into contact with may or may not accept their own valuation; and independent investigators may or may not be able to find objective confirmation of the class differences that most individuals feel. In spite of these considerations, some measure of social stratification is generally believed to exist and to have a considerable influence on the fortunes of individuals.

2.25. Societies differ not only in the degree of social stratification but also in the possibilities of movement between the strata. Many studies have been made of intergenerational mobility based on a hierarchical grouping of occupations and a comparison of the distribution of the occupational groups of sons for each occupational group of fathers. These studies suggest that there is a considerable amount of social mobility so that, while the distribution of families over occupational groups changes relatively little, the groups are not wholly made up of the same families in successive generations. This finding rests on the assumption that the transition proportions connecting the statuses of fathers and sons can be interpreted as probabilities, that is to say they are the same for all members of a group. If this is not true, for instance if the transition proportions are significantly different for blacks and whites, then these two groups should be treated separately. If this were done, it might be found that mobility was more circumscribed than the original study had suggested and that a truer view would emerge of mobility and the limitations to it. Broadly similar methods can be used to study intragenerational mobility.

2.26. Consideration of this range of problems suggests the importance of the following kinds of statistics:

(*a*) Information on the different dimensions of social class. These measures could be combined into a single indicator if this were thought desirable.

(*b*) Information on the distribution of the population over status categories.

(*c*) Information on the social status of members of the present generation in relation to the status of their parents in the preceding generation and perhaps in relation to the status of earlier forebears. It may be possible to improve on existing methods of defining and measuring social status, and attention should be given to the extent to which a community is homogeneous in the sense that the transition proportions are similar for all the groups in it.

(*d*) Information on the changing social status of members of a given generation.

H. The distribution of income, consumption and wealth

2.27. Generally speaking, the distribution of income from economic activity is highly skewed to the right with the mode considerably below the mean. The incomes in this initial distribution can be grouped to give a distribution of household incomes which is modified by taxes, social service benefits and assistance to give a distribution of final income. The redistributions brought about at this stage are usually designed to help the poor at the expense of the rich and to help large families at the expense of small ones. As a consequence, the distribution of consumption expenditures, though still widely dispersed, has a smaller dispersion than the distribution of initial incomes. In countries in which private wealth can be freely acquired, the distribution of wealth is far more unequal than the distribution of income.

2.28. Information on these distributions is needed for a general study of poverty and in formulating policies designed to ensure at least a minimum standard of living to various groups in the community which are unable to obtain one unaided. It is also useful for a study of changing consumption patterns, a subject which links up with what was said about high-level consumption in section D above.

2.29. Consideration of this range of problems suggests the importance of the following kinds of statistics:

(*a*) Information on the distribution of individual earnings and incomes from economic activity.

(*b*) Information on the distribution of household incomes and on the various redistributions resulting mainly from government policy with respect to taxes and benefits.

(*c*) Information on the distribution of consumption expenditures and on consumption patterns for different kinds of household at different levels of income.

(*d*) Information on the distribution of personal wealth.

I. Housing conditions and neighbourhoods

2.30. The quality of dwellings and the amenities they provide are of evident importance, and housing services are particularly capital intensive. The information required relates, in the first place, to the stock of dwellings, their quality, the facilities they offer and the amenities they provide; and, in the second place, to their occupancy, that is to say the link between the various categories of dwelling and the individuals, families and households that live in them. Other questions relate to the various ways in which the size and quality of the present stock can be changed (new construction, reconditioning, conversion, demolition), the form of occupancy (owner-occupation, various forms of tenancy) and ownership (public, private).

2.31. The price of a dwelling depends not only on its intrinsic qualities but also on the environmental characteristics of the neighbourhood in which it is located; indeed, in Wilkinson (281) reasons are given for supposing that the two factors may be of approximately equal importance. In connexion with housing it seems desirable, therefore, to provide information on neighbourhoods in relation to such matters as competing demands for land, access to amenities, effects on traffic congestion, the availability of jobs within an acceptable journey-to-work area and so on. This aspect of the problem links up with the environmental issues discussed in section C above.

2.32. Consideration of this range of problems suggests the importance of the following kinds of statistics:

(*a*) Information on the housing stock, the facilities it provides and its changes from year to year.

(*b*) Information on the distribution of individuals and households over different categories of housing.

(*c*) Information on ownership and forms of tenancy.

(*d*) Information on the characteristics of neighbourhoods which affect the way in which they are regarded for housing purposes.

J. Time and leisure

2.33. The maintenance of an acceptable balance between various calls on time is essential for health and the enjoyment of life. A part of the day is devoted to unavoidable duties such as learning, earning, travelling to work, shopping and housework; a part is taken up by natural functions such as sleeping and eating; and the remainder is at the disposal of the individual. The amount of time taken up by the various duties in the first group is constantly changing, sometimes upwards and sometimes downwards, and may vary systematically thus diminishing or increasing the amount available for the other two groups.

2.34. Leisure time can be identified with the third group, that is to say with that part of the day or year in which what an individual does is not imposed on him either by his physiological needs or by his commitments to others. Clearly there is a boundary problem here which in practice is not easy to resolve. For instance, some people need more than the average amount of sleep while others like to lie in bed for longer than their physiological needs require; some people cultivate their garden because they enjoy doing so while others do it to supplement their income; some people practice music as professionals while others do it as amateurs. In all such cases it is impossible to ignore norms and motives.

2.35. In accounting for time it is usual to list possible uses in considerable detail and collect information by means of time budgets which can then be grouped in various ways. As far as possible the kind of difficulty just mentioned should be allowed for but this implies that some of the categories should reflect differences in motive.

2.36. The next question to be considered is the classification of leisure activities since these vary widely and may show very different trends. Many of them have external effects, such as noise, and most do if indulged in by a sufficiently large number of people in a restricted area.

2.37. Finally, there is the question of the land, buildings, equipment and consumer goods required for leisure activities. Examples are parks and gardens, sports grounds, club premises, places of entertainment, pleasure boats, sports equipment and sportswear. In addition to items such as these, which wholly or mainly serve leisure activities, a part of the use of transport and hotel facilities is devoted to these purposes too.

2.38. Consideration of this range of problems suggests the importance of the following kinds of statistics:

(*a*) Information on how people spend their time, divided into such categories as: learning, earning, shopping and other household duties, travel connected with the above activities, sleeping, eating, washing and the like, and a residual category which in the first instance might be called leisure.

(*b*) Information on the main ways in which leisure time can be spent and the time devoted to each of these by different groups in the community.

(*c*) Information on the facilities and equipment available for the pursuit of leisure and the extent to which these are being increased through public and private expenditure.

K. Social security and welfare services

2.39. In section H above, reference was made to the redistribution of income that takes place as a result of taxation and social service benefits. Here attention will be concentrated on the kinds of assistance provided, their cost and the institutions involved.

2.40. Most countries operate social security schemes and similar arrangements which are responsible for paying out cash benefits to various groups in the community, in particular the aged, the sick and disabled, the unemployed and families with children. In addition to these state schemes, private occupational pension and sick pay schemes are becoming increasingly important in some countries.

2.41. In addition to social security arrangements, most countries provide a wide range of welfare services usually operated either by local authorities or by private charities. These services are largely concerned with helping particular groups, especially children, the sick and handicapped, and the elderly. There are also organizations, like the Citizens Advice Bureaux in Britain, whose services are available to the public generally; and others, like Oxfam, which set out to relieve the hungry all over the world.

2.42. In the case of the services operated by public authorities, it should not be difficult to record sources of revenue, benefits paid and other costs, and the number and types of recipient. In the case of privately operated services, the difficulties are likely to be much greater since the organizations are numerous, often relatively small and not standardized in terms of statistical returns. In view of the diversity of arrangements, public and private, international comparisons are possible only in broad terms.

2.43. Consideration of this range of problems suggests the importance of the following kinds of statistics:

(*a*) Information, as recommended in the SNA, on the economic accounts of organizations, public and private, engaged in operating social security and welfare schemes, grouped under suitable headings.

(*b*) Information on the number and type of beneficiaries under the different schemes.

L. Learning activities

2.44. Education can be regarded as a means of developing the personality or simply as a means of acquiring useful skills, in particular skills needed in earning a living. Most countries have a formal educational system, composed of schools, colleges and the like, which must be attended on a full-time basis between certain ages, usually from the age of six for some 6 to 9 years; and can be attended either full-time or part-time at other ages often under arrangements specifically designed for adults. In addition, there are many other methods of acquiring knowledge, such as studying on one's own or learning on the job, and the educational influences of parents, friends, cultural habits, mass media, etc. Educational statistics are usually restricted to "regular" educational activities and it is certainly desirable to get as clear and comprehensive a picture of it as possible.

2.45. Within the general field of education, the specific areas of concern differ greatly from country to country. In poor countries where the rate of population growth is high the main problem is usually the achievement of universal primary education as well as the eradication of adult illiteracy. In such countries primary enrolments are usually a large proportion of all enrolments. In other countries where illiteracy is no longer the main problem, other issues come to the fore: the role of early education in influencing attitudes to education, the incidence of drop-out and repetition, the high cost of secondary and tertiary education, the question of increasing specialization, the relevance of educational content, the concept of lifelong and recurrent education, etc. It should be remembered, however, that these problems also occur often in countries with high illiteracy rates. In view of these differences of emphasis, it must be recognized that any guidelines will contain suggestions of varying relevance in different parts of the world.

2.46. Since education is costly, it is important that the allocation of resources within educational systems should have regard to the gains expected from alternative arrangements and methods. A number of techniques available to the educational planner are described in Bowles (35). Benefits are usually conceived in terms of some concept of productive efficiency but this is incomplete; attention should also be paid to the distributive effects of alternative proposals. Some of the difficulties in applying cost-benefit analysis to problems of educational planning are touched on in section F.1 of chapter VII below.

2.47. While it is important to know what goes on in an educational system it is also desirable to investigate why, in any given system, some individuals do well and others do badly. In studying this problem it is necessary to look beyond the limits of institutional statistics of education since while some influences may come from within the educational system others are likely to come from outside the system: for instance, the individual's innate ability and family background.

2.48. Consideration of this range of problems suggests the importance of the following kinds of statistics:

(*a*) Information on the numbers of students in different parts of the educational system, on the flows from one part to another and into and out of the system. The classifications involved include age, sex, level, field and grade of education, whether repeating, whether full- or part-time, subjects studied and educational

qualifications obtained. Such information would make it possible to study and compare the structure of educational systems, to analyse the probable consequences of altering this structure, and to make detailed and consistent projections of student numbers.

(*b*) Information on the economic inputs and costs per student in different parts of the educational system. This should take the form of a detailed development of educational accounts on the lines recommended in the SNA. In many cases it would be necessary to go below the establishment level to the departmental level so as to be able to record for instance the difference in cost between a scientific education and one in the humanities. This information should be compatible with the information on student stocks and flows in which case the two types of data could be combined to provide projections of future educational budgets.

(*c*) The information in (*a*) and (*b*) above together with data on the net benefits to be expected from different types of education would enable a study to be made of educational priorities. For instance, in countries in which illiteracy is a problem, it may be more important to get rid of illiteracy and build up intermediate skills than to attempt a great expansion of higher education. For quite different reasons it may be desirable in highly literate countries to shift the balance in favour of primary education in an effort to foster a more positive attitude to education at the early ages.

(*d*) Information which would enable a study to be made of the influences on educational performance. Examples of such influence are sex, ability, social class and other characteristics of the family, and type of school attended. It would also be useful to examine the effect of the influences of the mass media on the attitude of children to the kind of education they receive.

(*e*) Although information on economic inputs and costs is provided for under (*b*) additional information is required in respect of teachers and buildings since in both cases time is needed to adjust the stock to the changing requirements of the system.

M. Earning activities

2.49. After leaving the system of formal education, the overwhelming majority of men and a substantial proportion of women seek paid employment or some other form of participation in economic activity. It is important to know the numbers in different industries, occupations and status categories and to be able to make links both with leaving qualifications from the educational system and with part-time participation in further education.

2.50. In addition to information on the labour force, classified in various ways, it is desirable to have information on labour mobility between industries, between occupations, between regions and between jobs.

2.51. For many purposes information is needed on the hours worked by different groups in the labour force. This is not simply a question of normal hours but should include data on overtime and short time and on time lost through part-time further education, sickness, accidents and trade disputes.

2.52. With the rapidity of technical change nowadays, it is to be expected that the skills acquired early in life will, in many cases, be inadequate for a whole lifetime. As a consequence, retraining is likely to assume increasing importance and requires to be fully documented.

2.53. Unemployment clearly gives rise to a number of problems. Perhaps the most important variables in this connection are age, sex and duration; but it is desirable to be able to classify the unemployed by industry and occupation too. There is also a need to form an opinion of the causes of unemployment. Some short-term unemployment, apart from that associated with trade disputes, is inevitable if industrial flexibility is to be maintained. Other unemployment, often of rather longer duration, is associated with industrial fluctuations and it is frequently an object of economic policy to reduce it to as low a level as possible. Long-term unemployment is usually associated with some structural dislocation of the economy, often localized, coupled with the obstacles, financial and other, to mobility. The steady growth of automation is a force continually freeing workers for other jobs but, until these other jobs materialize, the result is more unemployment. The work of employment exchanges in bringing job seekers into contact with vacancies requires to be fully documented.

2.54. Just as it is desirable to be able to link employment with education at one end of life, so it is desirable to be able to link it with retirement at the other end. In an ageing society it may be necessary to rethink conventional attitudes to promotion by seniority, the accepted age of retirement and existing disincentives to working after that age.

2.55. In addition to information expressed in numbers or in time, there is also need for information expressed in money: wage rates, earnings and supplements to wages, whether in the form of the value of income in kind or the quantitatively more important employers' contributions to social security, pension funds and the like. By combining the different kinds of information, the total wages bill can be built up and decomposed in various ways.

2.56. While his earnings may be the most important gain which an employee receives from his work, they are certainly not the only one. Perhaps the time has come to try to assess, if not to measure, what Marshall (137, p. 557) called the "net advantages" of different occupations. Many of the working conditions which would enter into this calculation are regulated by law and so may be regarded as fairly uniform, but others are not so regulated. In a small, personally managed concern, a worker normally has a better appreciation of the final outcome of his work, greater contact with decision-making, some personal responsibility and a greater possibility of arranging his own work schedule than is usually the case in large, impersonal concerns in which the speed and character of the work is largely set by mechanical equipment. To the extent that life in the first type of concern is generally preferred to life in the second type, the "productivity" gains of the second type are to some extent spurious. The fact that the second type tends to replace the first type proves little beyond the fact that economic incentives are very strong and few have the strength to resist them.

2.57. The subject of what might be called the quality of jobs (job satisfaction, dead-end jobs and so on) has been much studied in recent years. Out of a large number of publications reference may perhaps be made to Piore and Doeringer (165), Kahn (116) and the United States Department of Health, Education and Welfare (269). The last-named provides a compendium

of issues discussed in the literature and contains an extensive bibliography.

2.58. Consideration of this range of problems suggests the importance of the following kinds of statistics:

(*a*) Information on the numbers of workers (including the self-employed) in different parts of the productive system and on the flows from one part to another. The classifications involved include age, sex, industry of employment, occupation and industrial status.

(*b*) Information on hours worked, including data on overtime and short time and on time lost for various reasons.

(*c*) Information on the numbers affected by various retraining schemes and the cost of operating these schemes.

(*d*) Information on unemployment and vacancies and on the work of employment exchanges.

(*e*) Information on wage rates, earnings and supplements to earnings. This information could be combined with that mentioned under (*a*) and (*b*) to construct estimates of the compensation of employees which would provide a link between the demographic aspects of the labour force and its economic aspect as the main input into the productive system.

(*f*) Information on the non-financial aspects of working conditions and, in particular, on those which vary widely between different types of industrial organization.

N. Health and medical care

2.59. At any time the individuals in a community are in various states of health which depend in part on the environmental and economic conditions of their life, in part on their own constitution and medical history and in part on the progress of medical science and the availability of its services. Information about states of health is incomplete because these are usually only observed if the individual is ill enough to consult a medical practitioner or seek treatment in a hospital. The reasons for seeking medical advice and treatment range from the trivial to the serious and it is only recently, through the development of record linkage systems, that it has become possible to begin to record individual medical histories.

2.60. In addition to data on the general state of health and the way it is changing, information is also needed on the medical services available and the way in which they are used. Health education should be included among these facilities since it is possible that ill-health could be reduced if the general public were better informed about avoidable dangers to health.

2.61. Consideration of this range of problems suggests the importance of the following kinds of statistics:

(*a*) Information on states of health, the incidence of different diseases, disabilities and injuries, and their distribution with respect to age, sex and other variables.

(*b*) Information on changes in states of health and the influence of medical histories and of environmental and economic conditions on these changes.

(*c*) Information on the progress of medical knowledge and on the effect of its application in preventing, alleviating and curing diseases.

(*d*) Information on the economic accounts of all forms of medical service, as recommended in the SNA, including the service of health education.

(*e*) Information on the resources devoted to the provision of medical services.

(*f*) Information on the numbers using different medical services and on the manner and extent of the use of these services by different groups in the population.

O. Public order and safety

2.62. This subject can be looked at from three points of view: that of the offender, that of the victim and that of the forces of law and order (police, courts, prisons etc.).

2.63. Only a part of all the offences committed are known to the police; only a part of those known are cleared up; and only a part of those cleared up result in action taken against offenders. Apart from a caution by the police, action takes the form of judicial proceedings which result in some treatment of persons found guilty. The age, sex and other particulars of those proceeded against are known, and so it is possible to build up a picture of known crimes, classified by type and severity, and of offenders found guilty, classified by age, sex, type of crime committed and so on.

2.64. From the point of view of the offenders, perhaps the most important question is how to link the commitment of the offence with predisposing conditions, and the final outcome with types of sentence and methods of treatment. This would involve the same kind of sequential analysis as has already been referred to in several of the earlier sections of this chapter.

2.65. From the point of view of the victims, it would be useful to know how they are distributed over different groups in the community and, where appropriate, the magnitude of their losses. At present, little is known about victims; criminal statistics tend to concentrate on offences and offenders.

2.66. From the point of view of the forces of law and order, information is needed on the resources employed, the way in which they are deployed, the extent to which they succeed in meeting their aims and the income and outlays involved.

2.67. Consideration of this range of problems suggests the importance of the following kinds of statistics:

(*a*) Information on offences, offenders and the treatment of offenders.

(*b*) Information enabling connexions to be traced between personal characteristics and circumstances and the commission of offences, the form of sentence, and the subsequent life-history of the offender.

(*c*) Information on the characteristics of victims of offences and on their losses.

(*d*) Information on the economic accounts of services connected with public order and delinquency, as recommended in the SNA.

III. THE DESIGN

A. Social demography

3.1. A large part of the whole system described in this report has to do with stocks and flows of human beings classified in various ways. Both kinds of information are important but, in contrast with the position in economics, existing socio-demographic statistics tend, with few exceptions, to concentrate on stocks to the exclusion of flows. It is true that, for many purposes, stock statistics are all that is needed; and it is certainly easier to collect data on the state of individuals at a given point in time than on their movement between states in a given interval of time. On the other hand, for most forms of dynamic analysis, flow statistics are desirable: even if they only take the form of year-to-year links, they enable us to trace changes of state from one year's end to the next; and if they take the form of records about a group of individuals through all or part of their life sequence they enable us to trace connexions between states separated by a longer period of time.

3.2. Thus the importance of information about flows is likely to vary from one part of the system to another, depending on the kind of question we are trying to answer and the amount of knowledge we already have. For instance, we may be content to observe at regular intervals the slowly changing size and composition of the stock of households without feeling the need to show where the gains to any category come from or where the losses go to. On the other hand, we might be very much interested in finding out about the kind of individuals who were still in the various branches of the educational system at age 20 and what was likely to happen to them next; and we might wish to make projections some years into the future. If we knew the factors determining 19-year-old enrolments at, say, universities then we could, given sufficient past data, relate the enrolments to these factors; but to make projections we should still have to project the factors. In practice we are likely to have no clear idea of the quantitative importance of the factors concerned nor any accurate method of projecting how they will change. The adoption of a dynamic model based on flow information, as described in chapter VII below, can help in both matters: we can see how past states in a life sequence influence present states; and we can project, in a consistent way, the changes of state to be expected in all the relevant vintages (cohorts) at present alive.

3.3. As shown in Stone (204) information of the kind described in the following subsections and set out formally in chapter VII below can be applied to the population as a whole, to some aspect of the population such as its participation in education or the state of its health or to those members of it attached to some enterprise or government department. At all these levels we are interested in the evolution of a group and the factors on which this evolution depends; and essentially the same framework and methods of analysis can be applied at all levels.

1. Births and survivals

3.4. In order to gain insight into the demographic structure of a population we need information of the following kinds: (*a*) the opening stock of the population classified by age and sex; (*b*) the age and sex-specific death rates in the following interval of time; and (*c*) birth rates classified by age of mother and sex of child. The information under (*b*) and (*c*) could be arranged as in table 3.1 below.

Table 3.1. A condensed births and survival matrix: England and Wales, females, 1960-62

Age range	0-14	15-29	30-44	45-59	60-74	75-89	90-104
0- 14	0.339	0.843	0.131	0	0	0	0
15- 29	0.994	0	0	0	0	0	0
30- 44	0	0.988	0	0	0	0	0
45- 59	0	0	s_{43}	0	0	0	0
60- 74	0	0	0	s_{54}	0	0	0
75- 89	0	0	0	0	s_{65}	0	0
90-104	0	0	0	0	0	s_{76}	0

3.5. Table 3.1 gives a condensed and simplified picture of the birth and survival characteristics of the female population of England and Wales around 1961. The numbers in the top left-hand corner of the table are taken from Keyfitz (121, p. 42). The figures in the top row are the surviving female birth rates over a fifteen year period of women who, at the beginning of the period, were in one of the seven age ranges. In fact there should be a small positive figure at the intersection of the first row and the fourth column, but in the table this has been absorbed into the rate for the 30-44 age range. The figures and symbols in the subdiagonal are the age-specific female survival rates: the symbol s_{43}, for instance, represents the proportion

of women who were in the 30-44 age range at the beginning of the period and survived over the fifteen years to appear in the 45-59 age range at the beginning of the next period.

3.6. If we knew the age composition vector over the seven age ranges of the female population in 1961, we could premultiply this vector by the coefficient matrix in table 3.1 to obtain an estimate of the corresponding vector in 1976. On the assumption that the coefficients did not change and that we could continue to ignore migration we could, by repeated multiplication, obtain age composition vectors for 1991, 2006 and so on.

3.7. To estimate age composition vectors for males we should begin with initial age composition vectors but the coefficients would be different. The first row would show the male surviving birth rates classified by the age of the mother and these would be applied to the initial female age composition vector to give an estimate of the number of boys aged 0-14 in 1976. The male survival rates in the subdiagonal would be applied to the initial male age composition vector to give estimates of the numbers of males in the remaining age ranges in 1976. Again, this procedure could be repeated.

3.8. In practice (see, for instance, the United Kingdom Central Statistical Office (224, no. 139) and Thompson (214)), this simple scheme would be replaced by a more complex one in making population projections; but enough has been said to indicate the nature of the information needed and the manner of its use.

3.9. In what has just been said, births as well as survivals are treated as endogenous variables. For most of the purposes of this report we should be willing to accept exogenous estimates of future births (and migrations) and treat only survivals as endogenous. But instead of considering only the movement from age group to age group we should also be interested in other changes that accompany ageing. Let us now see how these can best be represented.

2. Characteristics and states

3.10. In his progression from birth to death an individual passes through a succession of states. Each year he becomes a year older; at some time between the ages of two and five he is almost certain to start going to school; at any time his parents may move to another part of the country; at any time he may fall ill and require to be treated by a doctor or to spend time in a hospital; at any time his aberrant behaviour may turn to delinquency and, beyond a certain age, this will be recognized by the criminal courts and, if detected, bring him in contact with the penal system.

3.11. Apart from these characteristics, of which some, like age, must change with time in a perfectly regular way, some, like health and educational attainment, are bound to change with time but not in such a regular way, and some, like social behaviour, may or may not change with time, there are other characteristics either of the individual or of his family which can hardly change. The individual is male or female, black or white, tall or short, to mention but a few personal characteristics. His family is patrician or plebeian, religious or indifferent to religion, authoritarian or permissive, to mention but a few family characteristics.

3.12. Obviously, an individual can be described by a very large number of characteristics. Any attempt to classify individuals by many characteristics simultaneously leads, as the number increases, to more and more compound categories, that is states, and calls for large quantities of data. While it must be recognized that some analytical purpose may require a classification by almost any combination of characteristics, a regular statistical reporting system must almost inevitably provide information on a less ambitious scale. For any aspect of life, information can be confined to what is thought to be necessary to describe that aspect, and the merging of information relating to different aspects can be treated as a separate problem. This application of the principle of divide and conquer leads naturally to the concept of life sequences.

3. Life sequences

3.13. A life sequence traces the changes of state from birth to death in some particular compartment of life. The standard form in which such information can be arranged consists of a table (or series of tables) in which the numbers in different states at the beginning and the end of a period are connected by: (*a*) the movements from state j to state k (j may or may not be the same as k) over the period; and (*b*) the new entrants (births and immigrations) and leavers (deaths and emigrations) of the period.

3.14. As the term is used here, a life sequence does not necessarily call for complete longitudinal data for a given vintage in the community. Three cases, which are illustrated numerically in the following pages, can usefully be distinguished: (*a*) a longitudinal or time-series study in which a group of individuals with the same year of birth (a vintage or cohort) is traced through the successive ages of life; (*b*) a transversal or cross-section study in which information is provided for each age, or age group, alive in a particular interval, say a year; and (*c*) a study of the kind mentioned under (*b*) in which, however, age does not enter into the definition of states. Whichever heading a study falls under, there are two requirements for the purposes of statistical reporting: a definition of the compartment of life with which we are dealing and a list of classifications to be considered characteristic of it.

3.15. In defining the compartment of life to which a sequence relates it is convenient to make use of the concept of a boundary as exemplified by the economic concept of the production boundary. Applying this idea to education, for instance, we might decide to draw the boundary round full-time formal education, say, and ignore all types of part-time and informal education; or we might decide to extend the boundary so as to include some but not all of these peripheral types of education. The need for this choice and the way it is made finds a close parallel in the definition of production. In the present instance we could defend the tight definition of the educational boundary by reference to the useful results that can be obtained from a study of full-time formal education and to the difficulties of collecting information about part-time and informal education.

3.16. In formulating the characteristic classifications of a sequence, the main endeavour should be to provide an adequate description of what takes place in it. For many purposes, but not all, age and sex are

desirable classifications in all sequences. In the case of learning activities, additional classifications which would obviously be useful are: level, field and grade of education, subjects studied and leaving qualifications.

3.17. Every sequence relates to the whole population of a country or region, whether the data are provided by complete enumeration or by sampling. Typically, therefore, there will always be one or more "inactive" categories. For instance in the learning sequence, it would be necessary to record those who were educationally inactive and to divide those who had not yet entered the educational system from those who had left it.

3.18. If we turn back to the preceding chapter we can find a number of examples of sequences and parts of sequences, or more generally, aspects of life. For example, sections L and M contain respectively the learning and earning sequences, and if these are combined with information on the educationally and economically inactive (mainly to be found in extreme youth and in old age) we get a complete life sequence, which can be called the active sequence since it is concerned with the two important activities of learning and earning. Section F deals with family groupings and their changes and contains a sequence which, in contrast with the above, might be called the passive sequence. Section N contains the sequence connecting health conditions, ailments, treatments and their consequences; and section O contains the sequence connecting aberrant behaviour, delinquency, treatments and their consequences.

3.19. It may help to clarify these ideas if the three kinds of table indicated in paragraph 3.14 are now illustrated numerically.

4. Vintage or longitudinal tables

3.20. A very simple example relating to the progression in England and Wales of males born in 1960 is given in table 3.2 below.

Table 3.2. The male population of England and Wales: the 1960 vintage

(Thousands)

State at new year θ / State at new year θ + 1		Outside world	England and Wales							Total
			1961 Age 0	1962 Age 1	1963 Age 2	1964 Age 3	1965 Age 4	1966 Age 5	1967 Age 6	
Outside world		8.9	1.5	0.5	0.3	0.2	0.2	0.2	0.2	
England and Wales	1960. Age 0	395.3								395.3
	1961. Age 1	0.0	393.8							393.8
	1962. Age 2	1.7		393.3						395.0
	1963. Age 3	0.3			394.7					395.0
	1964. Age 4	-0.8				394.8				394.0
	1965. Age 5	-0.8					393.8			393.0
	1966. Age 6	-0.8						392.8		392.0
Total			395.3	393.8	395.0	395.0	394.0	393.0	392.0	

3.21. In table 3.2 the entries in the final row and the final column relate to the number of boys born in 1960 who were in England and Wales at annual intervals beginning with new year 1961. The diagonally placed entries in the central part of the table show the survivors from one year's end to the next. The entries in the row for the rest of the world show the leavers from England and Wales and in this example in fact represent deaths. The entries in the column for the rest of the world show the new entrants into England and Wales, composed of births and net immigrants. Thus, the male births of 1960 were 404,200. Of these 8,900 died in the course of the year and, as we can see from the row headed 1960, age 0, 395,300 survived to the end of the year. At new year 1961 these survivors were still aged 0 but, in the course of 1961, 1,500 died and 393,800 survived to the end of the year by which time they had all reached the age of 1. No immigrants are recorded who would have been one-year-olds at the end of 1961, and so the stock of one-year-olds at new year 1962 was 393,800. Of these 500 died in 1962 and the remainder survived to the end of the year reaching the age of 2 in the course of it. And so on.

5. Cross-section or transversal tables with age as the primary criterion of classification

3.22. An example of this kind of table relating to the male population of England and Wales classified by age and school attendance is given in table 3.3 below.

3.23. In table 3.3, states occupied at the outset of 1965 (new year 1965) are shown in the columns and states occupied at the close of 1965 (new year 1966) are shown in the rows. The outside world, from which births and immigrants come and to which deaths and emigrants go, is distinguished from England and Wales. For lack of detailed statistics, migrants are recorded, as in the preceding table, as net immigrants, so that the row for the outside world contains only the deaths of 1965 and the corresponding column contains the births and net immigrants of that year.

3.24. The entries relating to England and Wales in the final row of the table show the composition of

Table 3.3. The male population of England and Wales classified by age and school attendance, 1965

(Thousands)

State at new year 1965 / State at new year 1966			Outside world	England and Wales														Total
				Age 0	Age 1	Age 2		Age 3		Age 4		Ages 5-15		Ages 16-19		Ages 20+		
				Not at school	Not at school	Not at school	At school	Not at school	At school	Not at school	At school	Not at school	At school	Not at school	At school	Not at school		
Outside world			8.3	1.5	0.5	0.3		0.3		0.2		0.2	1.6	1.4		268.0		282.3
England and Wales	Age 0	Not at school	434.9															434.9
	Age 1	Not at school		440.7														440.7
	Age 2	Not at school	0.5		426.2													426.7
		At school			1.3													1.3
	Age 3	Not at school	0.3			406.7												407.0
		At school				11.5	1.5											13.0
	Age 4	Not at school	-0.7					292.5										291.8
		At school						101.4	12.8									114.2
	Ages 5-15	Not at school	1.4							8.5		11.9	121.9					143.7
		At school	-5.3							272.8	112.5	8.9	3325.6					3714.5
	Ages 16-19	Not at school	-2.1									139.5	116.2	1005.5	104.6			1363.7
		At school											106.1		90.8			196.9
	Ages 20+	Not at school	21.9											331.9	2.1	15413.2		15769.1
Total			459.2	442.2	428.0	418.5	1.5	394.2	12.8	281.5	112.5	160.5	3671.4	1338.8	197.5	15681.2		23599.8

the opening stock of the population. Thus there are 442,200 infants aged 0 at new year 1965, the surviving births of 1964. Of these, 1,500 died in 1965 and the remaining 440,700 survived to new year 1966 when they were all aged 1. As no net immigration is recorded for age 1, the closing stock of one-year-olds, shown in the final column of the table, was composed entirely of the survivors from the opening stock.

3.25. Turning to the next column of the table, we find those aged 1 at new year 1965, the surviving births of 1963. Of these, 500 died in 1965 and the remaining 427,500 survived to new year 1966 when they were all aged 2. Of these survivors, 1,300 went to nursery school in the course of 1965 and the remaining 426,200 stayed at home. From the rows for age 2 we can see that the two-year-old school population at new year 1965 was entirely composed of the above 1,300 whereas 500 immigrants in 1965 are shown as supplementing the 426,200 survivors who stayed at home, to give a closing stock in this state of 426,700. The remaining rows and columns for England and Wales can be interpreted in a similar way.

3.26. The figure of 23,599,800 represents the total flow into and out of 1965. The inward flow is composed of the survivors from 1964 *plus* the births and net immigrants of 1965; and the outward flow is composed of the deaths of 1965 and the survivors into 1966. In the body of the table, that is the part excluding the row and column of totals, this figure is classified according to the numbers appearing in the opening and closing stocks of 1965. Thus, the number 8,300, at the intersection of the row and column for the outside world represents the individuals who appeared in neither the opening nor the closing stock of England and Wales: in effect children who were born and died in 1965. The numbers in the remaining entries of the row for the outside world, 274,000 in all, represent individuals who appeared in the opening but not the closing stock. The numbers in the remaining entries of the column for the outside world, 450,900 in all, represent individuals who appeared in the closing but not in the opening stock. And, finally, the numbers at all the intersections of rows and columns for England and Wales, 22,866,600 in all, represent individuals who appeared in both the opening and closing stocks. These remarks are strictly correct only if immigrants and emigrants are separated out and each is shown in the proper place.

6. Cross-section or transversal tables with no subdivision by age

3.27. An example of this kind of table relating to the male population of England and Wales classified by activity is given in table 3.4 below.

3.28. Table 3.4 is not on exactly the same basis as table 3.3 and the difference is explained and illustrated in Stone (199, pp. 30-6). In table 3.4 the final row relates to the leavers from 1965 rather than to the opening stock of 1966 and the final column relates to the leavers from 1966 rather than to the closing stock of 1966. All branches of full-time formal education, and not schools alone, are separately distinguished; and, among the economically active, teachers are separated from others.

7. Some taxonomic questions

3.29. There are two taxonomic questions which have been glossed over in the preceding sections and which must now be answered explicitly.

3.30. In the first place, all entries, whether relating to stocks or flows, must be based on a uniform definition of age. Here, this definition is made in terms of year of birth. Thus the 8,900 deaths at age 0 in 1960, shown in table 3.2, relate to the deaths of those born in 1960 and not to those who died in 1960 before their first birthday, many of whom were born in 1959.

3.31. In the second place, the tables are based on the concept of actual residence, that is the number of males resident in England and Wales at the beginning and end of a year. These numbers will include a certain number of foreign visitors in addition to normal residents. Slightly different tables could be based on the concept of normal residents. These would show the stocks and flows of the male normal residents of England and Wales, wherever they might be living at new year. This distinction is further discussed and illustrated in Stone (199, pp. 23-6).

Table 3.4. The active sequence as a whole: numbers in initial and final states and the movements between them: England and Wales, male population, 1965-66

(Thousands)

Final state \ Initial state		0	1	2	3	4	5	6	7	8	9	Numbers in final states
0	Outside world		10.9	1.1	0.5	0.1		0.1	1.2	89.8	178.6	282.3
1	Pre-school	435.6	1603.2									2037.8
2	Nursery and primary schools	-4.0	411.8	2055.9								2463.7
3	Secondary and special schools	-1.5	8.3	325.4	1327.9							1660.1
4	Further education	0.2			24.7	43.7		0.9		43.6		113.1
5	Teacher training colleges				4.4	0.7	13.5	0.2	1.4	5.5		25.7
6	Universities	1.5			23.8	2.2		75.8		12.3		115.6
7	Teachers					0.3	7.6	4.1	192.9	0.6		205.5
8	Other employment	18.2			274.8	56.7	1.2	23.5	0.6	14414.5		14789.5
9	Home and retirement				0.1				2.1	162.4	2191.9	2356.5
	Numbers in initial states	450.0	2033.2	2382.4	1656.2	103.7	22.3	104.6	198.2	14728.7	2370.5	24049.8

B. The allocation of time

3.32. In the preceding section, attention was concentrated on the main category to which an individual belonged in one or other of the sequences. For instance, in the active sequence, an individual was classified either as inactive or as active in some branch of the learning or the earning system. No consideration was given to the facts that a learner may do a certain amount of earning, an earner may do a certain amount of learning and that both learners and earners are, in the relevant sense, inactive for the greater part of the day.

3.33. Something could be achieved on the lines of the preceding section by more detailed categorizations: learners who did nothing but learn or spent various amounts of time in earning; and earners who did nothing but earn or spent various amounts of time in learning.

3.34. A different approach consists in recognizing that many, if not most, people do a bit of everything and, in fact, that most of their time is not spent in learning or earning but in such things as eating and sleeping. Time budgets enable us to see how much time is allocated to different purposes by various groups in the population.

3.35. If we follow what was said in section J of chapter II above under the heading of leisure, we can divide the twenty-four hours of the day, first, into time which is not at the disposal of the individual and, second, into time that is at his disposal. Each of these categories can be further subdivided. Thus, for adults, the first category might include: (*a*) productive work, whether in the form of a regular or a spare-time job; (*b*) unpaid housework; (*c*) time lost in the journey to work, shopping and queueing; and indispensable necessities such as eating and sleeping. The second category might also be subdivided. Clearly there are some questions here. For instance, the time actually spent in eating will usually include time spent in entertaining guests at meals which, above the time necessary for eating a simple meal, should probably be regarded as time at the disposal of the individual.

3.36. An example of this kind of analysis is provided by two studies of urban workers in the Soviet Union relating to 1924 and 1959. The earlier study was carried out by Strumilin, the latter, intended to be comparable with it, by Prudensky. Table 3.5 below is based on a summary given in Szalai (209). A fuller treatment of the many questions raised by this table can be found in the study by the Central Statistical Office of Hungary (107) and in the comparative survey of twelve countries edited by Szalai (210).

3.37. In table 3.5, the twenty-four hours of the day are accounted for, men and women being treated separately. Productive work (participation in economic activity) absorbed about eight hours in all cases; but on average it fell a little between 1924 and 1959 and at each date it was slightly lower for women than for men. Hours spent in regular work fell more markedly but this was partially offset at the later date by more time spent in spare-time economic activity.

3.38. The time spent on unpaid housework was at both dates much greater for women than for men but in each case fell over time, especially for women. The time spent on the journey to work, shopping and queueing increased noticeably over time but was greater for men than for women at both dates. The time spent on eating and sleeping was larger for men than for women at both dates but in each case fell a little over time.

3.39. If we add up the amounts of daily time so far accounted for and subtract them from 24 (hours being the unit of measurement), we obtain the time at the disposal of the individual which, at least in the first instance, we might call leisure. For men, this fell slightly over the period, from 14.7 to 14.1 per cent of the day. For women, it rose, from 7.6 to 10.1 per cent of the day.

Table 3.5. Average allocation of time on working days by urban workers in the Soviet Union

(Hours)

	1924		1959	
	Men	Women	Men	Women
1. Productive work				
a. For the community	7.83	7.64	7.17	7.20
b. Private	0.45	0.57	0.78	0.62
Total	8.28	8.21	7.95	7.82
2. Housework in the family				
a. Preparation of meals	0.48	2.56	0.23	1.41
b. Care of children	0.16	0.53	0.43	0.65
c. Other	1.08	1.71	1.04	1.85
Total	1.72	4.80	1.70	3.91
3. Lost time				
a. To and from workplace	0.95	0.86	1.93	1.30
b. Shopping and queueing	0.22	0.20	0.37	0.65
Total	1.17	1.06	2.30	1.95
Total (1 + 2 + 3)	11.17	14.07	11.95	13.68
4. Indispensable necessities				
a. Meals on the job and at home	1.55	1.27	1.18	0.93
b. Sleep	7.74	6.83	7.48	6.97
Total	9.29	8.10	8.66	7.90
Total (1 + 2 + 3 + 4)	20.46	22.17	20.61	21.58
5. Time at own disposal				
a. Study and culture	1.86	0.68	1.68	1.15
b. Recreation and entertainment	1.68	1.15	1.71	1.27
Total	3.54	1.83	3.39	2.42
Total (1 + 2 + 3 + 4 + 5)	24	24	24	24

C. Activities and costs

3.40. This part of the system deals with information of an economic kind, namely the inputs required to provide services such as education or medical care and their costs, the finance of these services and the accompanying transfers (such as educational grants and awards) and the capital expenditure which the services entail. An accounting framework for such information is provided by the SNA and what is mainly required is a set of detailed classifications relating to branches of activity and accounting entries.

3.41. In elaborating the accounts for public authorities provided in the SNA for use in the present system the main requirement is that the detailed classifications should be conformable with those used in organizing the corresponding socio-demographic data. For instance in setting up the production accounts for education, ancillary services, such as school meals and school health, should, according to the SNA, be separately accounted for and the accounts for different kinds of educational establishments should relate, essentially, to tuition costs. In so far as the school population is classified by type of establishment attended, without further subdivision, no difficulty arises. But if students following different courses, say in the humanities as opposed to science, are to be distinguished then it will be necessary to allocate the entries in the establishment accounts according to subject stream. This problem arises in mixed establishments if sex is distinguished in the socio-demographic statistics since the subject-mix is generally different for boys and girls. A similar need to go below the establishment level of accounting arises in those parts of the educational system in which ancillary services are not separately institutionalized.

D. Recipients and benefits

3.42. This part of the system deals with another kind of economic information, namely the distribution of the benefits derived from services, such as education or medical care, and various forms of transfer over different groups in the community. If the taxes paid by these groups are also taken into account, then information is available for studying the redistributive effects of taxes and social service benefits of all kinds. An accounting framework for such information is provided by "A Draft System of Statistics on the Distribution of Income, Consumption and Accumulation" (260).

3.43. This system is designed to provide information on the value of benefits in cash and kind and to relate these to other forms of income received and to taxes paid. These values are expressed in current money terms and no allowance is made for the likelihood that an extra £1 means more to a man with an income of £100 a year than to a man with an income of £10,000 a year. This subject, which is discussed in Marshall (137) under the heading of the marginal utility of money, raises many difficulties which, however, have to be faced in any application of cost-benefit analysis which is concerned with distributive justice as well as with productive efficiency.

E. Connexions

3.44. As we saw early in chapter I, the essence of a system is connectedness. Accordingly, a system of social and demographic statistics is distinguished from any other proposal for the collection and tabulation of such statistics by the fact that it is designed to enable connexions to be made.

3.45. We shall shortly see that there are a number of connexions for which a system of the present kind should provide; but, before the more important of these are listed, it may be useful to distinguish between three different forms, here termed comparison, multiple classification and integration.

1. Comparison

3.46. Comparison the simplest form of connexion, rests on the use of common definitions and classifications. These simple means enable us to compare the size or the age composition of a population at different dates or the size or the age composition of different populations at the same date. In either case, we must use the same concept of population and the same classification of it at each point of the comparison. In many cases, as when a population is classified into age groups, no special difficulty arises; but if we classify household income by ranges of income, we have to allow for differences in the value of money at the two dates or places to be compared.

3.47. In principle, a comparison of two observations can be extended to a series of observations though in practice this may involve different sources of data, as when census estimates are interpolated and extrapolated to cover non-census years. Further, a time series or cross-section of one variable can be matched by similar time series or cross-sections of other variables, thus providing a basis for regression and correlation analysis.

3.48. If two or more series are to be related, steps should be taken to ensure that, as far as possible, they are truly comparable. For instance, measures of labour productivity are obtained by comparing the output of an industry with the employment in that industry and so it is necessary that the list of establishments used to define the industry should be the same when collecting employment statistics as when collecting output statistics. This is an obvious point but in some countries no central list of establishments exists and slightly different lists are used by different collecting agencies.

2. Multiple classifications

3.49. A given type of entity, such as establishments in the engineering industry, to follow on from the preceding example, can be classified simultaneously by several criteria, such as size of output, size of employment and region. This provides us with three distributions, relating to three characteristics of engineering establishments, but not with the connexions between these distributions.

3.50. Just as we can classify a given type of entity by different variables so we can classify a given type of variable by different entities. An example is provided in the SNA. Account 29 of the SNA (255, table 2.1) classifies the compensation of employees: first, by various productive activities; and, second, by various institutional sectors.

3.51. Both types of multiple classification imply nothing more than that the marginal vectors of a matrix (in however many dimensions) have a common sum.

3. Integration

3.52. Integration, as the term is used here, means that in addition to having estimates of the elements of the marginal vectors of a matrix we have estimates of the elements of the matrix itself. This implies that the object of a classification can be classified by all criteria simultaneously: for instance, to continue with the earlier example, that we can fill in for engineering establishments all the cells in a matrix of dimensions output size-group $\times$ employment size-group $\times$ region.

3.53. Depending on the data to be integrated, use may be made of the operation of addition or of multiplication. Thus table 3.3 above shows how the flows in an interval can be added up to provide estimates of either the opening or the closing stock. Similarly, numbers and unit costs in different branches of an educational system could be multiplied out to give the total expenditure in each branch.

F. A diagrammatic presentation of the system

3.54. It is not an easy matter to present the system in terms of a diagram: the system is complex whereas a diagram, if it is to be intelligible, must be simple. An attempt at this form of presentation is made in diagram 3.1 below in which various bodies of data, corresponding to parts of the system, are represented by boxes and the connexions between them are represented by lines. The solid lines indicate that the data in the boxes are integrated and the broken lines indicate that they are more loosely connected.

3.55. If we look at this diagram horizontally, we can see that the data required are of four main kinds: (*a*) data obtained from an elaboration of the national economic accounts (SNA); (*b*) socio-demographic data; (*c*) data obtained from the complementary system of statistics relating to the distribution of income, consumption and accumulation; and (*d*) data obtained from time accounts. In panel (*b*) several rows are distinguished, corresponding to the different sequences. The first row relates to the general demographic sequence concerned with the size and composition of the population. The following three rows relate to family formation, families and households and to the related topics of social class, housing and leisure. The fifth row contains the active sequence composed of learning activities, earning activities and the inactive. The sixth and seventh rows relate respectively to health and to delinquency.

3.56. In order to see why it is difficult to be more precise in a diagram let us consider what is intended to be conveyed by the entries relating to the active sequence.

3.57. First, the two boxes labelled respectively learning activities and earning activities (and the inactive) are shown as integrated; also they are both shown as integrated with the box labelled population size and composition. This implies an amount of information that would make possible a complete stock-flow statement of the active sequence; but it says nothing about the classifications to be used in different parts of the sequence. Useful classifications are suggested in chapters XVII and XVIII of part Two, but the diagram does not point to any selection. To attempt to do so would not only complicate the diagram excessively but it would also be misleading since what is desirable depends on circumstances and the problems to be solved.

3.58. Second, the two boxes are shown as integrated with several sets of accounts obtained from an extension of the SNA. This implies that the socio-demographic data are conformable with the cost data in the national economic accounts.

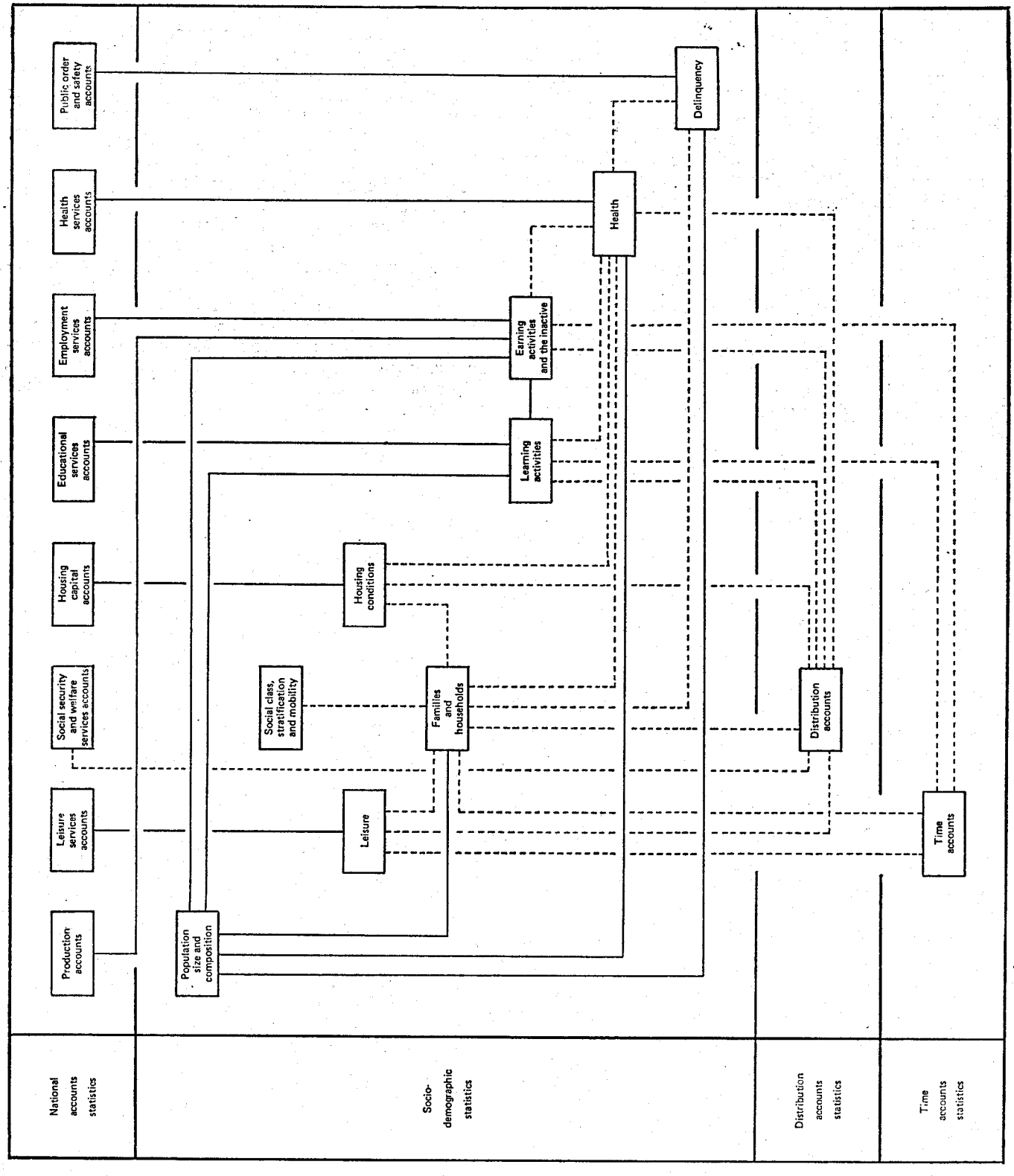

Diagram 3.1. An outline of a system of social and demographic statistics

3.59. Lesser forms of connexion are shown between the two boxes and some others, in particular those for health and for the distribution and time accounts. The desirability of such connexions is fairly obvious, but again they are not specified in detail.

3.60. This account of one small part of the diagram illustrates the difficulties of being more precise in indicating connexions between different parts of the system. The usual comment on this kind of diagram is that there ought to be far more connexions, but to some extent this represents a misunderstanding. It is, of course, intended that all the data in the system, however it may be carved up into different parts, should be consistent and so, since every individual appears in every sequence, it can be argued that everything should be connected to almost everything else. But most of these connexions would be more instrumental than substantive, that is to say they would be

introduced so that we could assure ourselves that our data were consistent and not because we wanted to use both sets of data in a single analysis. Where this is so, the connexion would be trivial and the diagram would be more informative if it were left out. Going back to the example mentioned in the preceding paragraph, it could be said that once we were satisfied that what we meant by the inactive in the active sequence bore an explicit relationship to what we meant by the inactive in the health sequence there would be no pressing need to connect the two.

3.61. The converse of what has just been said could be used to provide an argument for showing far more integration in the system: but this, too, would be misleading. It is true that for some analytical purpose individuals or households may have to be cross-classified by classifications characteristic of different parts of the system. But for many analytical purposes such a degree of integration is unnecessary and much can be achieved by dividing up the whole system into parts, corresponding to modified versions of existing bodies of data, connected at various points. The belief that nothing can be achieved until everything is fully integrated is likely to delay the improvement of socio-demographic statistics; provided that nothing is done to conflict with the ultimate goal, the urgent need in most countries is to see as clearly as possible the next few steps ahead.

3.62. The points that have just been made bring out the degree to which any discussion of a system of social and demographic statistics depends on assumptions made about the manner in which data are collected. If a comprehensive, continuously updated system of individual records is available, the problem of making connexions differs greatly from the present position in most countries in which data are collected in separate bodies: demographic, educational, manpower, health, criminal and so on. Accordingly, it is to the question of methods of collection that we shall now turn.

IV. THE COLLECTION OF DATA

A. Methods of obtaining data

4.1. A variety of methods are available for obtaining the information described in this report. As far as socio-demographic data are concerned, wide use is made of censuses of population, compulsory registrations and administrative returns. By these means information, much of it emanating from the individual concerned or a close relative, is mediated to the central compilers of statistics through returning officers, registrars, school or hospital authorities and the like. Returns such as these, for the most part compulsory, enable a wide coverage to be obtained in their fields and form the backbone of most statistical reporting systems.

4.2. Although essential for some purposes, for others the amount of information provided by a complete census may be excessive, particularly where the intention is to analyse data relating to individuals or to individual households. As described in Ruggles and Ruggles (180) a census or other large source of data, such as a file of income tax returns, can be used to establish special sets of microdata. These will be particularly useful if the sample is so drawn as to be representative of the census population or some well-defined part of it.

4.3. If the microdata set is large enough, it will provide sufficient information for analyses that require only a part of it. Such a microdata set has been built up by the Bureau of the Census in the United States containing a 1 in a 1000 sample of the population in 1960. This sample contains 40 items of information for each of about 100,000 households and provides a basis for a large number of cross-tabulations.

4.4. An example of the use of this microdata set is provided in a simulation study of the economic circumstances of the aged in 1980 by Schulz (184). This study relates to individuals aged 40 and over in 1960 and simulates their changing circumstances in the ensuing twenty years. These circumstances include mortality, changes of job and retirement, changes in private insurance and pension funds and eligibility for social security. Their incidence was based on past experience and applied to individuals on a probability basis depending on personal characteristics such as sex, age and race. In this way a detailed picture could be built up of the condition of the population aged 60 and over in 1980; but the main purpose of the study was not so much to provide a forecast as to test the sensitivity of the simulation to possible structural shifts and changes in policy variables. A general account of the problems arising in microanalytic simulation studies is provided in Orcutt and others (153).

4.5. Compulsory methods of collecting statistics have inevitable limitations. Even if backed by legal sanctions, compulsory nationwide returns depend for their success on acceptance by the public, and this sets a limit to the subjects on which questions can be asked, their quantity and their difficulty. While complete returns are needed for such purposes as enumerating the population in small geographical areas there are, as we have seen, many other purposes for which they are not needed. As a result, there is a trade-off between completeness of coverage and range of information available.

4.6. As a consequence, survey methods have come, in recent decades, to play a larger and larger role in the collection of official statistics. Being addressed only to a sample of respondents, who are free not to co-operate, answers can be obtained to a wider range of questions. Where the survey is conducted by interview rather than by mail, more time can be spent on each respondent and a personal relationship can be built up between interviewer and respondent which, combined with a carefully drawn up questionnaire, can do much to increase the quality of the information collected.

4.7. The isolated survey is coming to be replaced in some fields by continuous surveys. These may be of several kinds: those in which the subject matter is fixed or variable; and those in which the sample changes (in whole or in part) as time goes on or those in which it remains the same.

4.8. An example of a continuous survey in which the subject matter remains largely the same but which is not based on a fixed sample, is the British family expenditure survey, United Kingdom Department of Employment (230). This has been running since 1957 and produces a wealth of information mainly on the expenditure on goods and services by different groups of households. It also provides other information about households and is referred to as a multi-purpose survey.

4.9. An example of a survey which is multi-purpose in a rather wider sense is the general household survey recently established in Britain, United Kingdom Office of Population Censuses and Surveys (237). This survey is based on the sample design originally produced for the family expenditure survey and in its first year (1971) was used to collect information in a wide range of fields, such as family composition, housing, employment, education and health, from about twelve thousand households. It is intended that some of these topics will be covered continually while others will change from time to time in line with the changing interests of the government departments concerned.

4.10. Examples of surveys which make use of a fixed sample of individuals who are followed from birth onwards are provided by the longitudinal studies reported in Douglas (53) and Douglas, Ross and Simpson (55) and in Pringle, Butler and Davie (172) and Davie, Butler and Goldstein (49). The first survey follows the progress of some 5,000 children born in March 1946. It was initiated mainly with the object of obtaining medical information but it has also produced educational data of very great interest. A list of fifty-two publications is given in Douglas, Ross and Simpson (55, pp. 232-5). The second survey relates to a larger sample of some 17,000 children born in 1958. A general account of longitudinal studies together

with descriptions of many of these is given in Wall and Williams (274).

4.11. Sample surveys are not restricted to single countries but are sometimes organized on an international basis. Two examples relevant to the subject matter of this report relate to achievement in mathematics and to the use of time. The first of these was sponsored by the International Project for the Evaluation of Educational Achievement (IEA) and is described in detail in Husén (108). The study covers twelve countries and examines achievement in mathematics in relation to school organization, curriculum, methods of instruction and social factors. It has resulted in a large data bank containing fifty million pieces of information. The second international survey was sponsored by UNESCO and is described in detail in Szalai (210). It is a cross-national comparative survey of daily activities in urban and suburban regions and also covers twelve countries.

4.12. The longitudinal surveys mentioned in 4.10 above are one of the few means available at present of collecting information about individuals at different stages of their life. Another method which, in Britain at any rate, has been developed largely for medical purposes is the construction of case registers and record linkage systems. The building up of what, in effect, is a computerized data bank relating to patients suffering from a particular disease, or group of diseases, in a particular area is useful both to practitioners and to medical research workers. Such a register is described and its uses are illustrated in Baldwin (15).

4.13. This method, employing a population register, statistical files and record linkage, can be applied in many fields of a practical, administrative nature; in recording and keeping up to date, for instance, details relating to the pay and pension rights of teachers or the progress of students through a university. It can be further extended to record information on the population as a whole. A system of individual identification numbers and personal data files has been in operation in Norway over the last decade and is described in Nordbotten (149) and Aukrust and Nordbotten (12). A general discussion of the problems of data storage and linkage took place at the thirty-sixth session of the International Statistical Institute and is reported in Norbotten (148) and the papers and comments that follow it.

4.14. Up to now, systems of individualized data (I-D systems) when designed to cover the population as a whole have concentrated on a limited range of information though they can be organized to absorb sample survey data in addition to their main series. Potentially, they are a very powerful tool for implementing the statistical system described in this report and this type of application is emphasized in the references just given to the Norwegian developments. The existence of a complete I-D system in any country would not do away with the need to think out the structure of a system of social and demographic statistics and the principles on which it should be based; indeed the wealth of information might well make this need all the greater. But it would shift the emphasis from subsystems defined with reference to conventionally distinct bodies of data to analytical topics defined on the assumption that connexions between subsystems would not be much more difficult to make than connexions within subsystems.

4.15. The development of completely general I-D systems comes up against difficulties which are likely to take some time to overcome. In the first place, the amount of data to be assembled, stored and manipulated is very large. In the second place, the process of recording is a continuous one and a feature of the method is the facility it offers for connecting events which are separated in time, so that the data stored must be able to be retrieved and manipulated over at least a human life span. And, finally, there is, in some countries at least, a problem of public acceptance. While it is possible to build in controls which, if the system is used properly, would safeguard the individual from its misuse, it is hard to see how these controls could be effective if the operating authorities, possibly with the best intentions, decided to misuse the system. This point should not be overemphasized, the danger is inherent in any record system that enables names, addresses and characteristics to be linked. But the possibility of compiling detailed, individual dossiers would increase a danger which all human history suggests cannot be entirely ignored.

B. Problems connected with different kinds of data

4.16. We have seen that there are many means available for collecting data of the kinds described in this report. Sometimes there will be a choice between alternative means, all capable of yielding the information required; sometimes all that is needed is a modification of an existing means; and sometimes a new means will have to be established. The emphasis in this report is on connectedness, between different aspects of life and over time, and this is likely to tip the balance of advantage in favour of the newer methods of collection, multi-purpose samples, longitudinal surveys and so on. Nevertheless, more traditional methods of collection would seem to remain indispensable in some areas and definitely advantageous in others. Accordingly, in this section we shall review the main classes of data required by the system in terms of the means which might be used for collecting them.

1. Data on stocks

4.17. Although all the methods of collection described in the last section are capable of yielding stock data, only a census of population, apart from a complete I-D system (which might be regarded as a perpetual census), can provide the complete coverage needed for many purposes including benchmark data for samples and projections.

4.18. A census is usually taken every tenth, or at most every fifth, year. Estimates relating to the size and structure of the population are usually made with the help of flow statistics of births, deaths and migrants; and the resulting series are eventually adjusted after another census has been taken. Statistics of migration are often a weak link in this procedure even in countries which have effective arrangements for the registration of births and deaths.

4.19. In many fields more specific information is needed and this can frequently be obtained through a system of administrative reporting, that is the collection of data as a by-product of administration whether it is needed for administrative purposes or not. Some institution, say a school, is required to send to some central authority at regular intervals, say each year, a standard statistical return describing its activities

which, because it is in standard form and relates to the same date, or period, in each year, can be added to the returns from all other schools and used in compiling a statement for the school system as a whole.

4.20. If an institution is asked to make a regular return, it is to be assumed that the questions asked are of a kind that it can answer from its ordinary records, with a certain amount of search but without the need for any form of special inquiry. Since many categories of institution keep more or less elaborate records which, within categories, are amenable to standardization, because all the constituent institutions are engaged in a similar activity, regular returns provide a powerful means of collecting information.

4.21. In extending stock data in this way, the main problem is to ensure compatibility with the basic demographic records. A standard definition of age is needed; and year of birth would seem the most convenient. Stock statistics often need to be compared, and so should relate to the same date; 1 January would seem a convenient choice, though cases could be made out for other dates. Common classifications need to be worked out, to avoid, for example, one set of data being tabulated in five-year age groups and another in three-year age groups. These points, all trivial in themselves, can give a great deal of trouble to users, who are rarely in a position to make the necessary corrections and adjustments.

4.22. If more elaborately classified stock data are needed, resort must be had to a multi-purpose survey. It may be doubted, however, whether estimates relating to the whole population classified in such a degree of detail will often be needed. As was pointed out above in the discussion of microdata sets, a sample of observations provides sufficient information for many analytical purposes.

2. Data on flows

4.23. Stock data provide a means of estimating net flows: the net change in the stock over a given time interval. But for many purposes we need information about gross flows, the inward flow being distinguished from the outward flow. This type of information can be obtained in several ways. As an example, let us consider the movement of pupils between the branches of a school system.

4.24. One way is to make use of school records. As we have seen, it is quite usual to conduct an annual census of school-children, each school making a return of its own pupils at a given date. To obtain flow information, this recording system would have to be extended by asking the position a year ago of all the pupils now present at the school. Some would have come to school for the first time, some would have remained in their present school, some would have come from another school and some would have come from abroad. It would also be desirable to ask what had happened to those on the register a year ago who were not on the register now. Some would have moved to another school or into a job, some would have died and some would have emigrated. This kind of question is somewhat different from the first kind. A school can reasonably be expected to know where a pupil was a year ago but cannot always be expected to know the present position of a pupil who has left in the course of the year. He may have left with the intention of taking a job but by the end of the year he may in fact be enrolled in some other part of the educational system. This example illustrates the difficulty of achieving complete consistency in an open system of records but should not, in practice, lead to serious inaccuracy. This method has been applied by the Central Bureau of Statistics of the Netherlands and results for 1967 have been reported (145).

4.25. Although this method is fairly simple to apply, there remains the administrative burden of matching and updating. This can be further simplified by the adoption of the cohort coding system designed by UNESCO, Goldstone (85). In this scheme, pupils are divided into school cohorts and are given common cohort codes which record age at entry, year of entry and grade of entry. The pupil keeps his basic code and only subsequent events are added. In this way a reconstruction of events is possible and so the method provides not only year-to-year links but also longitudinal data of the kind described in the following section.

4.26. A second method is to collect the information from a sample of individuals or their parents. This method has the advantage that at the same time it is possible to collect information which would not be readily available in school records. An example, relating to the school system of Baden-Württemberg is provided in Freytag and Weizsäcker (74).

3. Longitudinal data

4.27. The methods described in the preceding subsection are designed to trace changes of state over an interval without concern for the states the individual was in earlier in his life. For some purposes this is sufficient: the probability of moving from a given state to other states may be independent of the path by which the given state was reached, that is to say a knowledge of past states adds nothing to a knowledge of the present state in assessing future prospects. But this is not a general proposition and in any case it needs to be tested. As model-builders, we may wish to define states so that the probabilities of various movements from them are the same for all individuals in them; but this only amounts to saying that, where past characteristics are important, current states must be defined by reference to past as well as present characteristics.

4.28. In such cases it is not sufficient to string together information relating to different samples of individuals at different stages of life. Instead, it is necessary to trace the progression of a given vintage (or cohort) of individuals: to set up a longitudinal study. In other words, longitudinal data are essential where the past exercises an influence on the future which is not summed up in the present; if it were, life sequences could be assembled by combining different samples at each stage of life.

4.29. Longitudinal data, as in the surveys mentioned in paragraph 4.10 above, are usually built up gradually by recording as they take place the events in the life of a group of people of the same age.

4.30. An alternative approach, exemplified in Wolgang, Figlio and Sellin (286), is to select a sample born in some past year and then build up a record of the relevant events in their lives from official records. In this way it was possible to trace the criminal history of a group of ten thousand boys born in 1945 over the ages 10 to 18.

4. Integrated data

4.31. In section E of the preceding chapter we saw the importance of being able to integrate data in addition to being able to compare and link them. Integration depends largely on conformable classifications and the ability to cross-classify individuals by a number of characteristics. If we begin by thinking of separate bodies of data relating to education, manpower, health and so on, we can reasonably expect to be able to integrate data within areas but not between areas. In order to integrate data between areas we must make use of a method that enables individuals to be classified according to criteria drawn from more than one area. Apart from an I-D system, such methods are either microdata sets or multi-purpose surveys as far as integration under addition is concerned.

4.32. In the case of integration under multiplication, the need is to obtain conformable classifications for accounting data and for human stocks. In concluding this chapter let us consider some of the problems of fitting accounting data into the system.

5. Accounting data

4.33. Two kinds of accounting data arise in the system: the accounts of services such as education, health etc. on the production side; and the income and outlay accounts of households, including information on transfers in cash and kind on the consumption side.

4.34. Accounting data relating to services can only come from the establishments and institutions responsible for producing and financing the services. Since this part of the present system is to be thought of as an extension of the SNA, the general principles suggested there should be followed. There are, however, some additional problems. If we take education as an example, the more important of these can be described as follows. First, it is necessary to ensure that the accounts for schools run by public authorities, private non-profit institutions and private enterprises are reasonably comparable. Second, it is necessary to group the separate establishments into categories conformable with the data on student stocks and flows. Third, it is necessary to account separately for ancillary services such as school meals and school health. This may not be difficult in the case of schools run by public authorities but is likely to present a problem in countries where the private educational sector is important. Finally, it is necessary to find a means of accounting for the cost of various types of part-time student compared with full-time students and for the cost of students educated in different disciplines.

4.35. Information on incomes, outlays and transfers falls mainly within the subject matter of household expenditure surveys but, again, special problems are likely to arise. The most obvious of these relates to information on the costs of free services and benefits in kind in such areas as education and health. Households can be expected to know what services and benefits they receive but it will then be necessary to cost them on the basis of accounting data obtained from the suppliers.

V. SOCIAL INDICATORS

A. The need for social indicators

5.1. Without attempting a precise definition of the term, we can say that social indicators are constructs, based on observations and usually quantitative, which tell us something about an aspect of social life in which we are interested or about changes that are taking place in it. Such information may be objective in the sense that it purports to show what the position is or how it is changing; or it may be subjective in the sense that it purports to show how the objective position, or changes in it, are regarded by the community in general or by different constituent groups. There is no reason to suppose that objective and subjective indicators relating to the same phenomenon will necessarily move together because the tastes, attitudes and standards of people may change or conflict.

5.2. If we are willing to attach this general meaning to social indicators, it is not very difficult to see why they are wanted; the reasons are those for wanting any kind of information. In the first place, they enable us to describe what the position is, or what changes have taken place in it, either objectively or subjectively. In the second place, they provide us with the data to be explained if we wish to understand, in either objective or subjective terms, why things are as they are or why certain changes have taken place. The explanations of the objective and the subjective situations will, in general, run in different terms. In the third place, given an understanding of the situation, policies may be introduced to improve it, objectively or subjectively, and the indicator serves to show whether or not an improvement is to be observed after the policy is introduced. Since other changes will often be taking place at the same time, there will generally be some difficulty in isolating the effect of the policy; but, in principle, this can be done given a sufficiently detailed model.

5.3. The way in which a social indicator can best be used depends very much on circumstances. As an illustration of this proposition let us consider the expectation of life at birth which, by summarizing survival rates at all ages, provides a convenient, simple measure of the general state of health. A plot of the expectation of life at birth against income per head in different countries suggests that the expectation more than doubles as income per head is raised from $100 a year to $1000 a year, whereas beyond this level little if any further improvement is observed. This finding suggests that in poor countries it may be more important to direct capital to increasing employment and productivity than to extending medical facilities. In rich countries, on the other hand, the effect of economic improvement is likely to be confined to the poorest sections of the community. A second point is that while the expectation of life at birth is a useful summary indicator, it is in fact too summary to serve as an objective of medical policy. For this purpose different areas, such as infantile mortality, the control of epidemic diseases, cancer, psychiatric disorders and road accidents, need to be considered separately and the expected benefits from different courses of action need to be weighed against their costs. A final point is that the expectation of life at birth (or at any other age) says nothing about the healthiness of that life; for many purposes it would be useful if the total expectation could be divided between years of good health and various degrees of sickness and disability.

B. Criteria for defining social indicators

5.4. We have seen in the preceding section that social indicators may serve the needs of curiosity, understanding and action or any combination of them. Since curiosity and the wish for understanding frequently arise from a desire for action, it can be argued that social indicators should be defined with particular areas of social policy in mind and should be directed to providing the information needed for policy purposes. From this point of view the definition of indicators should begin with an attempt to map out areas of social concern which, as we saw in section A.3 of chapter I above, is the line taken in OECD (156). This is an acceptable starting point provided that it is realized that without a good deal of analysis it may not be possible to identify areas of concern in any but the broadest terms so that only the most general guidance can be given as to the kind of indicators that would be useful. As a rule it will be necessary to go through an analytical stage, leading to an understanding of the relevant social processes, before the indicators needed can be specified in detail.

5.5. Leaving curiosity and understanding on one side, the information which would be useful in formulating policy, taking action and reviewing the consequences of action is not necessarily the same in each case. Useful information may take the form of a simple data series, such as the number of live births in successive intervals of time, the elementary processing of two or more series, as in calculating crude or standardized birth rates, or a more complicated form of processing, as in the calculation of the expectation of life. It may be useful to distinguish between simple indicators, that is data series, and synthetic indicators, that is constructs from data series involving a greater or lesser amount of processing; but it must be admitted that a social indicator may be of either kind. This would conform to the practice in economics, where "tons of saleable coal raised" would provide a simple indicator of the output of the coal-mining industry and the "gross domestic product at constant prices" would provide a highly processed synthetic indicator of economic performance in the aggregate.

5.6. Apart from the detailed information required for policy purposes, it may also be useful to summarize the salient features of some aspect of social life. In the case of education, for instance, it would be of considerable interest to know how the number of years spent in full-time formal education has been changing, the division of this time between primary, secondary and

tertiary education, and the dispersion of individual times around the average for the whole community. Such information can be extracted from the records of countries with well-developed statistical services. It would also be of interest to know how far the aims of educational systems were adapted to the needs of the societies they serve and how far the methods employed in realizing these aims were efficient. It is not immediately apparent that an educational system which ends at a comparatively early age and involves in its final stages a high level of specialization is well suited to a society which lives under conditions of rapid and far-reaching technical change; nor is it apparent that the knowledge gained, the concern for knowledge shown or the identification of those taught with cultural values are commensurate with the time, effort and money devoted to education. These are clearly controversial questions which challenge the nature of an educational system and not merely the details of its operation. They are questions which are seldom asked and almost never answered. The data which might contribute to answers are certainly not available in conventional educational statistics.

5.7. This last example brings out a point which is obvious enough but which is worthy of explicit mention. A social indicator can only be constructed if we know how to construct it and if the data needed for its construction exist. This means that there may be indicators which we should like to have but which, at any particular time, we cannot have. An example of something that falls short of the ideal is provided by the input measures of output adopted in the national accounts in respect of such services as health and education provided by public authorities. The conventional measures are acceptable for many purposes but clearly they do not enable us to compare inputs and outputs in these activities.

5.8. The outcome of this discussion can be summarized as follows. Social indicators relate to some area of social concern and they may serve the purposes of curiosity, understanding or action. They may take the form of simple data series or they may be synthetic series obtained by applying a greater or lesser amount of processing to data series. At any particular time, it may not be possible to construct all the indicators that would be desirable and this limitation should be kept in mind. Social indicators form a subset of the data series and constructs actually or potentially available and are thus distinguished from other statistics only by their suitability and relevance for one of the purposes mentioned. An account of social indicators and their relationship to social data series and other constructs is provided in Moser (142); and a description of the work carried out at the United Nations Research Institute for Social Development on indicators of socio-economic development appears in McGranahan and others (135).

C. Methods of constructing social indicators

5.9. In this section some account will be given of methods available for the construction of synthetic social indicators which involve a considerable amount of data processing. There is nothing to be said about the construction of simple indicators and it is hardly necessary to describe the construction of elementary forms of synthetic indicator which are derived from these by calculating ratios, rates of growth and the like. The discussion will begin with methods that lead to descriptive indicators and will continue with an account of the problems that arise if the indicators are to be capable of bearing an interpretation in terms of welfare. Indicators for different parts of the system will be suggested in part Two.

1. Factor analysis

5.10. This is a method of exploring systematically the common components of variability in a set of variables and of arranging the results in an ordered manner. It originated as a means of analysing the results of mental tests but is in no way restricted to that application. In the final version of his great work *The Vectors of Mind*, Thurstone (216) wrote:

> "Factor analysis is useful, especially in those domains where basic and fruitful concepts are essentially lacking and where crucial experiments have been difficult to conceive. The new methods have a humble role. They enable us to make only the crudest first map of a new domain. But if we have scientific intuition and sufficient ingenuity, the rough factorial map of a new domain will enable us to proceed beyond the exploratory factorial stage to the more direct forms of psychological experimentation in the laboratory."

5.11. In its application to time-series the method can be outlined as follows. We start with m series, each observed over a common period of n years. Let each series be measured in terms of the deviation from its mean over the n years and let these deviations be normalized so that the sum of their squares is equal to 1. If $n = 3$ each series of normalized deviations can be represented as a point on a sphere of radius one and so the m series will appear as m points on the unit sphere. The position of each point can be defined by means of its relationship to a system of three Cartesian co-ordinates whose origin is at the centre of the sphere. The position of these co-ordinates is arbitrary but let us take the first to be a diameter connecting the poles of the sphere, the second to be a diameter connecting two points on the equator and the third to be another diameter also connecting two points on the equator which are set at right angles to the second co-ordinate (and also of course to the first). These co-ordinates can be interpreted as constructed series, each independent of (or orthogonal to) the other two, in terms of which each of the original m series can be expressed. If two of the m series are perfectly correlated positively, they will be represented by the same point on the surface of the sphere; if they are perfectly correlated negatively, they will be represented by points at opposite ends of a diameter; and if they are completely uncorrelated, the second point will lie anywhere on a great circle to the plane of which the radius which terminates in the first point is perpendicular.

5.12. In general, the points representing the m series will be scattered about the surface of the sphere in a haphazard fashion and so can only be expressed in terms of all three co-ordinates or factors. However, the points may cluster round a great circle in which case they can be virtually accounted for in terms of two co-ordinates or factors; or they may cluster round a single point on the surface of the sphere (or around the points at opposite ends of a diameter) in which case they are highly correlated positively (or negatively) and can be virtually accounted for in terms of a single co-ordinate or factor.

5.13. If $n > 3$ the visual representation in terms of points on the surface of a sphere has to be generalized. This can be done by considering points on the surface of a hypersphere of n dimensions. In general, these points can be expressed exactly only in terms of n co-ordinates or factors. However, experience in many fields of application shows that the correlations between variables (or series) is such that most if not all of their variation can be expressed fairly accurately in terms of a relatively small number of factors. For instance, in Wilkinson (281) it is shown that of the total variance of seventeen variables indicative of the structural and environmental characteristics of a sample of houses in the town of Leeds, 72 per cent can be accounted for by five factors.

5.14. In the foregoing account of factor analysis use was made of a geographical analogy involving the concepts of poles and an equator. Evidently, on the terrestrial sphere the poles and the equator cannot be placed anywhere. But, on an abstract sphere they can be placed anywhere provided only that the axis of the poles is perpendicular to the plane of the equator. How, it may be asked, is their position determined in such a case? In the method of calculating factors, or principal components as he calls them, proposed in Hotelling (106), the first component or factor (which we may identify with the polar axis) is chosen in such a way as to be as representative as possible of the movement of the m series over the n time intervals or, in more technical language, to account for as large a part as possible of the sum of squares of the observations. The second factor, orthogonal to the first, is then chosen so as to account for as large a part as possible of the residual sum of squares left after the part accounted for by the first factor has been removed. And so on until, in the case of m variables which are linearly independent, the sum of squares is exhausted by the mth factor.

5.15. The factors obtained in this way are mathematical constructs, the first being the series most representative of the movement of the m original series, the second, the next most representative but orthogonal to the first and so on down the line. In general, therefore, factors are not to be interpreted in substantive terms. However, the co-ordinate system is arbitrary and we are free to rotate it relative to the surface of the sphere if at the same time we change the coefficients relating the series to the factors. By rotating the original co-ordinate system we may seek a new set of orthogonal factors which we can identify with social forces in the real world. This is done by observing the connexions between the rotated factors and the initial series. For instance, in Wilkinson (281) the author identifies the first and fifth factors with environmental influences and the second, third and fourth with structural influences. Once this identification has been made, it is possible to analyse the determinants of house prices by regressing these prices on the factors, which are few and uncorrelated, rather than on the original influences, which are numerous and correlated. The conclusion, in this instance, was that on the whole house prices are rather more responsive to environmental influences than they are to structural influences.

5.16. Apart from rotating the axes, it is also possible to transform them so that they are no longer orthogonal. For the purpose of interpreting factors there is much to be said for this procedure since there is no reason why influences which we vaguely apprehend as social forces should be independent of one another. But just because they are non-orthogonal (or oblique), these axes give rise to difficulties, which will not, however, be recounted here.

5.17. The "humble role", as Thurstone called it, of factor analysis should be apparent from this example, but it should not on that account be despised. For in dealing with many social problems we have no clear picture of the relevant variables and their relationships as we have, generally speaking, in the natural sciences and even in some branches of economics. A method which offers the possibility of systematic exploration is therefore to be welcomed.

5.18. On the other hand it must be recognized that the method needs careful handling if useful results are to be obtained, as the following considerations show.

5.19. First, the variables to be included and the way in which they are included need a good deal of thought for almost by definition these questions have no unequivocal answer. For instance, we might represent the labour force by the numbers in employment, the proportion of the population employed, the proportion of the population between the school-leaving age and the conventional age of retirement employed, the rate of growth of employment and in many other ways. Which we choose (we may choose more than one) depends on which we think, in the absence of any certain knowledge, will best contribute to the aim we have in mind.

5.20. Second, even if all the series are measured in a common unit, such as money or money of constant purchasing power in the case of an economic example, we have a choice between expressing the basic association between the series in terms of the correlation matrix or the variance matrix. If we choose the first alternative, each series has equal weight; whereas if we choose the second alternative, large series, like wages, will have a much greater weight than small series, like unemployment benefits. The use of the variance matrix means that large series will tend to be better represented than small series in terms of any given number of factors.

5.21. Third, if the observations relate to regions which differ widely in size it will usually happen that the number of people, workers, students, criminals or whatever it may be will be large in the large regions and small in the small regions. Since it is not of much interest to discover that large regions are on the whole large, by whatever characteristic they are measured, and that small regions are small, it may be best to deflate the series by dividing them by the population. However, for some purposes it may be more relevant to use the physical areas or the gross national products of the regions as deflators. Several problems of this kind are exemplified in Stone (195).

5.22. Finally, if the initial series are expressed in different units, as will usually be the case in social applications, it is no longer useful to start from a variance matrix though the arbitrary scaling implied in the use of a correlation matrix may be acceptable. More sophisticated scaling techniques may be useful if an attempt is to be made to give different weights to different series.

2. Index-numbers

5.23. Another method of constructing synthetic indicators, and the one extensively used in construct-

ing economic indicators, is the technique of index-numbers. This technique, which is usually applied to series of individual prices and quantities, provides a means of combining them into averages or aggregates such as the general price level or the gross domestic product. It requires the choice of: (*a*) a base period by reference to which the calculations are made; (*b*) a set of simple indicators, or data series, in respect of the individual prices or quantities; (*c*) a set of weights to which the simple indicators can be applied; and (*d*) a formula for carrying out the calculations.

5.24. Interest in price comparisons and the possible use of index-numbers in making them have long histories as can be seen from Fleetwood (69) and Parenti (160). Individual price series existed before any satisfactory basis was available for weighting them and, in early wholesale price index-numbers, the device was used either of counting the series for an important commodity several times or of including separate series for several varieties of that commodity. With the development of family budget inquiries, censuses of production and, finally, the national accounts, a firm basis for weighting has become available; though it should be noted that as late as the 1930s "business indicators", compiled by combining such diverse series as steel production, employment in manufacturing, tonnage of shipping under construction and postal deliveries by means of more or less arbitrary weights, were still in use. Their place has subsequently been taken by index-numbers of production, culminating in measures of the gross domestic product at constant prices, but in their day the crude indicators served a useful purpose in tracing the ups and downs of economic activity.

5.25. The raw material for the construction of price and quantity index-numbers could obviously be treated by the methods of factor analysis. An interesting example of the use of analogous methods in this field is given in Theil (213).

5.26. Many types of formulae have been proposed for index-numbers and new ones are introduced from time to time. A systematic account of most of them was given some fifty years ago in Fisher (67). In spite of the variety then available and of later additions, most practical work makes use of the aggregative index-numbers associated with the names of Laspeyres and Paasche and of their geometric average, Fisher's ideal index-number.

5.27. Fisher's form of index-number enables the change in a value total to be divided between influences associated with price movements and influences associated with quantity movements by means of formulae symmetrical in prices and quantities. In Siegel (188) it is shown how Fisher's method can be used to divide the change in a value total between any number of influences, though it must be recognized that the calculations to be made rise rapidly with the number of influences and become almost prohibitive if more than five influences are introduced. A socio-economic example of this method applied to the influences which result in earnings per head in a region being different from those in the country as a whole is given by the U. K. East Anglia Economic Planning Council (233, pp. 77-9). Male earnings in each industry both in the region and the country were expressed as the product of numbers employed, weekly hours worked and hourly wage rates. Earnings per head in the region were 9 per cent below those in the country as a whole, and it was expected that this difference was mainly due to the presence in the region of low-paid industries, such as agriculture. The analysis showed that differences in industrial composition accounted for 3 percentage points, differences in hours worked accounted for −1 percentage points (that is longer hours were worked in the region than in the country as a whole) and 7 percentage points to differences in rates of hourly earnings. This analysis could have been generalized to separate out the differential effects of unemployment in and the sex composition of the two labour forces.

5.28. The method of index-numbers can be developed in many ways which are relevant to the subject matter of this report. At least two of these have already been tried and are briefly described below.

5.29. The first application is concerned with the comparison of levels of living in countries with widely different natural conditions, social arrangements and economic structure. In such cases the commodities produced are frequently so different that the traditional approach of comparing representative baskets of goods and services in the two countries breaks down, while the unreliability of exchange rates as deflators of money totals is likely to be accentuated. In the case of food, it may be possible to recast the estimates in terms of nutritional units but there remain the problems of valuing these units and of deciding how far equal quantities of each are equally desirable in the two situations; and in other cases alternative units are generally not available. Consequently, efforts have been made to supplement or even replace economic data with information from other fields such as demography, health and education. Among the many conceptual problems of this type of application is the choice of an acceptable weighting system. Examples of analyses on these lines are provided in Bennett (25) and by the level of living index developed at UNRISD and published in Drewnowski and Scott (56).

5.30. The second application also relates to comparisons of levels of living but in a very different context. With the growing concern for environmental pollution, it is argued that the gross domestic product is not a good measure of economic performance because the amount of untreated pollutants arising from modern methods of production and forms of consumption is not accounted for in it. If a proper accounting were made, it is said, total output would be seen to grow more slowly than is indicated by the conventional measure.

5.31. In Leontief (125) it is shown that if we knew (i) the amount of each pollutant emitted by each branch of production and (ii) the input structure of processes capable of treating pollutants, then it would be possible to describe the productive system in terms of an extended input-output matrix which embodied the treatment services and their costs. In Stone (200) this analysis was extended so as to introduce the consumer into the picture since what is important is not to eliminate pollution altogether but to devote resources to its reduction up to the point at which the gain from devoting a little more is balanced by the loss of the goods and services forgone to make this possible.

5.32. With this additional information it would be possible to construct an estimate of the gross domestic product in which pollution was accounted for. Whether or not this measure would fall on the introduction of an anti-pollution policy would depend on how the services of reducing pollution were treated. If they

were treated as intermediate product, the gross domestic product would measure the output of commodities in the conventional sense and so would tend to fall at constant prices since some of the resources previously used to produce conventional commodities are diverted to the reduction of pollution. As a consequence of this treatment the new policy will show itself in a rise in the price of conventional commodities. If, on the other hand, the services of reducing pollution were treated as final product, there would be little tendency either for the gross domestic product at constant prices to fall or for the price level to rise. What would tend to fall in either case is the output of conventional commodities available for final demand.

3. Utility and optimization

5.33. Even with perfect information on prices and quantities, there is no getting round the fact that relative values gradually change. As a consequence, index-numbers based on a fixed set of valuations (prices) do not provide a measure of the satisfaction (or utility) of the goods bought in successive periods. This can be seen by comparing the results usually found by contrasting Laspeyres and Paasche index-numbers. Since the demand for goods that fall relatively in price tends to increase, Laspeyres' quantity index will usually show a greater rise than does Paasche's since it gives relatively high weights to quantities that rise relatively fast. Most quantity index-numbers are of the Laspeyres type and, to avoid the difficulty just mentioned, it is common practice to bring the base up to date every five or ten years. But this does not solve the problem of forming a comparable series and to get any further we need a means of comparing the satisfaction derived from different baskets of goods without reference to a fixed set of relative prices.

5.34. We can attempt to deal with this problem by taking as our point of departure an explicit utility function which expresses the satisfaction derived from a basket of goods in terms of the quantities which the basket contains. But there are great difficulties with this method. Since in practice we cannot measure utility, we can only try to choose between alternative functions in terms of the agreement with observations of the demand estimates derived from them. Typically, we find it hard to choose between alternative formulations which give different measures or indicators of utility; and it is not difficult to formulate demand functions which fit the observations well but do not lead back to any explicit utility function. Work in this area suggests that for the time being we cannot improve on the results obtained by constructing index-numbers; but it should make us question the cardinal significance that is usually attributed to them. It may of course be the case that some weighted average of consumption goods and services has risen by 10 per cent, as shown by an index-number; but this does not mean that the utility which the community derives from this additional consumption has also risen by 10 per cent quite apart from the fact that it may be accompanied by more pollution or by an increase in the inequality of incomes.

5.35. Even if we cannot transform a measure of consumers' expenditure into a measure of welfare or satisfaction, we can derive some comfort from the fact that under free market conditions consumers will do their best to spend their income so as to maximize their satisfaction, that is to say to equalize the satisfaction derived from different expenditures at the margin.

5.36. This view of consumers' behaviour can be formalized by saying that to the best of their ability consumers solve a constrained maximum problem in making their choice of purchases. But evidently there are many cases in which consumers cannot be supposed to behave in this way. The reduction of pollution provides an example. If we regard treatment services as final product, we should have to set up final demand equations for these services and this we cannot do, since consumers have no experience of buying them and in any case they are public goods. If, on the other hand, we regard treatment services as intermediate product, we should need to know how far treatment was to be carried in each case since otherwise it would not be possible to calculate the social cost of conventional commodities which would be reflected in the prices paid by consumers. Just because treatment services are a form of public good the extent of their use cannot be handled by a market mechanism but requires a political decision based on an assessment of how far it is worth while to meet the costs involved, that is to say on a form of cost-benefit analysis. Viewed in this light, one of the aims of cost-benefit analysis is to supplement market calculations where these are impossible or ineffective. The seeming objectivity of market calculations is not an overriding consideration: the community is not well-served by ignoring pollution but, equally, the best solution is unlikely to consist of attempting to eliminate it entirely.

4. Life expectancies

5.37. Let us now turn to a source of social indicators which is derived from demography rather than economics. Actuarial calculations already yield a number of important social indicators, such as the expectation of life at birth, and it is not difficult to show that they could be made to yield many more.

5.38. The expectation of life at a given age is the number of years that individuals of that age can, on average, expect to live. Thus for a particular population we might find that, for males, the expectation of life at birth was 68.5 years and that this expectation had dropped to 11.8 years at age 65. These calculations can be made from a knowledge of age-specific death rates, since from these we can calculate age-specific survival rates and therefore the probability of surviving from any initial age to any later age. From this information we can determine the age at which the probability of survival from any given age is one-half.

5.39. A time-series of the expectation of life at birth in a country tells us, under normal peace-time conditions, something about the state of health of that country, since it summarizes in a particular way the country's survival characteristics at all ages. It is clear, however, that it is not necessary to restrict the concept of ageing merely to survival; it is possible to introduce other changes of state at the same time. For instance, table X.1 in Stone (199) contains part of a survival table for males in England and Wales relating to 1964-65 in which, at each age, the survivors are classified by activity.

5.40. A number of social indicators can be derived from this kind of table. For instance, the expectation at birth is that in the first twenty years of life 4.6 years will be spent before going to any kind of school, 6.5 years will be spent at nursery, primary or

special schools, 4.3 years will be spent at the ordinary level of secondary school, 0.4 years will be spent at the advanced level, 0.3 years will be spent in some form of further education and 3.4 years will be spent outside the system of full-time formal education after leaving it. These numbers add up to 19.5, indicating that in the first twenty years of life, death accounts on average for half a year.

5.41. Evidently, studies of survival need not relate simply to age or to changes in education and employment activities over the life-span. In principle, any imaginable changes of state, such as changes in health conditions, could be studied in this way.

5.42. The decomposition of life expectancies, the calculation of the time likely to be spent in different states and the calculation of the probability of reaching one state from another, do not exhaust the usefulness of the methods under discussion for the purpose of constructing social indicators. It is also possible to use the same information in association with data on unit costs to work out the total cost of completing a sequence in life and, if desirable, to discount this cost back to the present. In this statement, cost can be replaced by gain or even by net gain. As is evident, the present system provides the information needed for all such calculations.

5. Public opinion surveys

5.43. The methods described so far aim at providing objective information. In dealing with social questions, however, we may also be interested in subjective information relating to how much people in general know about an issue, how much importance they attach to it and what kind of solution they think would be desirable.

5.44. Public opinion surveys provide a means of obtaining some light on such matters. It would be interesting to know, for instance, what issues are commonly regarded as major problems and how the ranking of these issues changes with time. It would also be interesting to know how far the public connects one issue with another: does it believe, rightly or wrongly, that the great increase in pollutants in recent years is associated with activities and processes that contribute to the rising standard of living; does it believe, rightly or wrongly, that the scale and organization of modern enterprise, which also contribute to the standard of living, are associated with industrial unrest and alienation?

5.45. It has to be recognized (see Moser (141, 2nd edition, pp. 220-2)) that there are special difficulties in formulating and interpreting questions bearing on attitudes and opinions. Answers to such questions are particularly sensitive to the way in which they are worded; and in many cases there is unlikely to be any simple, unqualified answer that reflects accurately the respondent's views. In Abrams (1) a number of examples are given of subjective social indicators.

D. Concluding remark

5.46. One of the main reasons for attempting to develop a system like the present one is the contribution of better related statistics to the production of social indicators. These potentialities are clear from recent work on social indicators as exemplified in Sheldon and Moore (186) and Shonfield and Shaw (187). For instance, in Sheldon and Moore (186, p. 670) Duncan remarks, in connection with education, that: "records now on file which include information on enrolment status, grades of school completed, and birth year (or age at the survey date which can be translated into birth year) must be re-examined with a view to compiling as complete an account as is possible on the progress of successive birth cohorts through the school system". This view accords with the one taken in this report.

VI. NON-MARKET ACTIVITIES

A. Service activities in the SNA

6.1. In many countries the service activities with which this report is concerned are wholly or largely operated by public authorities and private non-profit institutions. Profit-making establishments may be important in some branches, such as education and health, and these must, of course, be accounted for. But whereas the accounts of profit-making establishments follow the general lines laid down for industrial establishments in the SNA, those for non-profit institutions are a little more complex. In what follows the recommendations in the SNA will be described and illustrated in terms of the accounts for education.

1. Educational activities and institutions

6.2. In the SNA, establishments providing educational services may be organized as: (*a*) profit-making enterprises (industries); (*b*) private non-profit institutions; or (*c*) departments of central or local government. In each case, the establishments appear as a subdivision of social and related community services in the industrial classification.

6.3. In the case of category (*a*) no further details are suggested; as regards category (*b*), the content of this form of education is spelt out briefly in the discussion of the purposes of private non-profit institutions; and as regards (*c*) a subdivision is suggested in the discussion of the purposes of general government. At the detailed level these "purposes" are intended to be in one-to-one correspondence with the "services". The distinction between the two is that purposes indicate an area of concern whereas services, or activities, indicate an area of operation; for instance, secondary education as opposed to the running of secondary schools.

6.4. The scope of the educational purposes in category (*b*) is set out in the SNA (255, p. 89), as follows:

> "Universities and colleges; primary and secondary schools; technical, vocational, arts and crafts schools; dramatic, music, dancing and other art schools; blind and deaf schools. Included in addition are institutions and organizations engaged in research into the objectives, organization, administration and methodology of all kinds of education; providing scholarships, fellowships and other stipends for educational and training purposes; and making grants in support of educational research, activities and facilities."

6.5. Thus charitable foundations making educational and research grants are included in this category, in addition to schools, universities and the like. It is also said in SNA (255, p. 89, footnote *a*) that

> "Where educational institutions provide board and lodging, social and sports clubs have restaurants, bars and lodging facilities etc., which it is not desirable to cover in separate statistical units, supplementary data should be compiled on the outlays and receipts for food and beverages and shelter included in the total outlays and receipts of the institutions."

6.6. Thus educational costs are divided between items like tuition costs and items like board and lodging, and the latter are to be treated, as far as possible, as subsidiary services.

6.7. The following more detailed classification of educational purposes is given in SNA (255, pp. 87-8) in respect of category (*c*):

> "*General administration, regulation and research.* Administration of ministries or central departments of education; general regulation and promotion of school systems, institutions of higher learning and adult and other educational activities; expenditure on research into objectives, organization, administration and methodology of all types of education.
>
> "*Schools, universities and other educational facilities.* Provision, management, inspection and support of primary and secondary schools, colleges and universities, technical training institutions, schools for the deaf, blind and dumb of a non-custodial character and adult education facilities; scholarships; and loans and similar grants to individuals for educational and training purposes.
>
> "*Subsidiary services.* Transportation of school children, school meals, medical and dental services furnished in schools, and other ancillary services designed to promote and facilitate school attendance."

6.8. This more detailed classification presupposes, in conformity with the practice of most countries, a higher degree of institutionalization of subsidiary services in general government than is found among private non-profit institutions. It is contemplated, for example, that there may be a special school-meals service, so that in this case the problem of board at any rate does not arise.

2. Activity (production) accounts

6.9. These accounts show, on the outgoing side, the costs of all the inputs, both intermediate and primary, required to produce educational services; and on the incoming side, the revenues which enable these costs to be met, whether they be revenues from the sales of the output or income from transfers.

6.10. Activity accounts are needed for each of the three classes mentioned above. Within each class various kinds of establishment, such as primary schools, secondary schools, teacher training colleges, colleges of further education and so on, are distinguished, each with its own account. In the case of establishments run by public authorities, separate accounts are set up for administration and inspection and for special services such as school meals and school health.

6.11. For the profit-making establishments, revenue takes the form of fees. Expenditure is allocated between purchases of commodities (intermediate inputs), compensation of employees (preferably divided between teaching staff and non-teaching staff); and other components of value added.

6.12. For the non-profit establishments, public and private, fees and similar contributions paid by pupils and students or their parents usually play a minor role and the greater part of revenue comes from the corresponding purpose accounts. Expenditure is allocated as in the case of the profit-making units.

3. Purpose accounts

6.13. These accounts, which are needed only for the non-profit establishments provide a link between the activities of private non-profit institutions and government departments and the various forms of transfer which constitute their main source of revenue. Within each class, purposes and activities are in one-to-one correspondence with one another. Each purpose account collects all the transfers intended for current expenditure on a particular purpose and redistributes them so as to further that purpose: either by financing directly the corresponding activity or by giving grants and other benefits to institutions or individuals connected with that activity.

6.14. For the purposes, in the case of government establishments, revenue consists simply of grants received from public authorities. Expenditure may be devoted either to financing the corresponding activities, both public and private, or to giving grants to individuals. Thus a distinction is made between public grants to institutions and public grants to individuals. There is an arbitrary element here in so far as grants to individuals are intended to cover fees to institutions, since these fees are in many cases paid directly by the financing authority to the institution and the individual receives only that part of the grant which is intended to cover living expenses. Nevertheless it seems desirable that as far as possible all fees, however financed, should appear under one heading, namely as payments by individuals for a service. This can be achieved by showing the full value of the grants as paid by the purpose accounts to the individuals themselves, and then routing that part which is intended to cover fees through the income and outlay accounts of households, whence it flows into the activity accounts of the relevant institutions.

4. Capital expenditure accounts

6.15. These accounts are needed for all three classes. They receive money from one or more of the capital finance accounts, which in most cases will relate to some larger institution, such as the central government, that has made itself responsible for the capital expenditure of its educational establishments. This expenditure consists of investment in buildings and other capital equipment undertaken to maintain or increase the capacity of the establishments or to improve the facilities they offer.

5. Income and outlay and capital finance accounts

6.16. These accounts have not figured in the above list. The reason is that educational establishments, with the exception of the profit-making enterprises, have hardly any financial autonomy. They are usually exempt from most forms of taxation and do little saving or dissaving. They spend what money is available to them on their services, and are dependent for their capital expenditude either on the public authorities or on special appeals. The profit-making enterprises are usually responsible for only a small part of the total educational effort. Hence, having established the purpose accounts to take care of the allocation of financial flows, it is justifiable, from a purely educational point of view, to merge the income and outlay and the capital finance accounts of education in larger institutional aggregates.

6. A numerical example

6.17. In table 6.1 below, the accounting structure proposed in the SNA is illustrated in terms of a set of educational accounts for public authorities in England and Wales in 1965. This table should not be taken as an exact illustration of the accounting treatment proposed but should be taken as a preliminary outline of the lay-out of the economic accounts of education.

6.18. Following the order of the SNA, the upper panel of table 6.1 contains the activity accounts, the middle panel contains the purpose accounts and the lower panel contains the capital expenditure accounts. Thirteen activities and purposes are distinguished, which can be grouped under the three main headings proposed in the SNA: general administration (column 1); educational institutions (columns 2 through 9); and subsidiary services (columns 10 through 13). The activity accounts in columns 7 and 9 are empty because, in Britain, public authorities do not operate either universities or institutions of adult education; and the corresponding capital expenditure accounts are necessarily empty too. There are no data for capital expenditure on school transport, and so this service is here treated as if it simply consisted of buying general transport facilities.

6.19. If we look at the incomings into the activity accounts, shown in the first two rows of panel (*a*), we can see that fees and contributions from individuals are negligible except for the parental contribution to school meals which, at the time, amounted to about one-third of the total cost of this service and now forms a larger proportion. Apart from this contribution and a small amount of fees in respect of teacher training, the whole cost of these activities is paid for by the public authorities themselves.

6.20. The outgoings are shown in the lower part of panel (*a*). Row 3 shows the expenditure on commodities, that is to say on the products of industry in the widest possible sense. In the SNA there is a detailed classification of commodities in terms of the characteristic products of the various industries distinguished in the system; and further, the value of these commodities, expressed at producers' prices, is divided between basic values and commodity taxes. Although these distinctions are not illustrated in this example, the differentiation of commodities is of course essential for the purposes of input-output analysis and the separation of commodity taxes from basic values highly desirable.

6.21. More attention is paid here to what the SNA calls "compensation of employees", which in this group of activities constitutes the main component of value added. In rows 4, 5 and 6, it is divided into three parts: salaries and employers' contribution to superannuation schemes and national insurance in respect of teachers; wages, salaries and contributions in respect of other staff; and items of labour income, in all cases very small, that cannot be classified under either of these

Table 6.1. The educational accounts of public authorities

England and Wales, 1965

£ million.

	General administration	Nursery schools	Primary schools	Secondary schools	Special schools	Teacher training colleges	Universities	Other institutions of further education	Institutions of adult education	School meals and milk	School health	School transport	Recreation and training	Total
	1	2	3	4	5	6	7	8	9	10	11	12	13	
	a) ACTIVITY (PRODUCTION) ACCOUNTS													
1. Fees and contributions from individuals						0.5				38.1				38.6
2. Transfers from corresponding government purposes	46.5	3.3	305.6	375.2	20.5	28.2		136.3		76.8	17.9	15.7	12.5	1,038.5
Total incomings	46.5	3.3	305.6	375.2	20.5	28.7		136.3		114.9	17.9	15.7	12.5	1,077.1
3. Purchases of commodities (current)	18.7	0.7	54.3	71.1	5.1	8.8		20.2		67.6	6.9	15.7	6.3	275.4
4. Salaries and employers' contributions: teaching staff	1.2	1.3	204.0	226.3	9.0	11.2		81.9			0.2		0.7	535.8
5. Salaries, wages and employers' contributions: others	26.0	1.2	22.9	24.3	4.0	4.5		16.4		43.5	10.4		4.3	157.5
6. Other labour income	0.1		0.4	0.4	0.1	0.1		0.2			0.1			1.4
7. Loan charges	0.5	0.1	24.0	53.1	2.3	4.1		17.6		3.8	0.3		1.2	107.0
Total outgoings	46.5	3.3	305.6	375.2	20.5	28.7		136.3		114.9	17.9	15.7	12.5	1,077.1
	b) PURPOSE ACCOUNTS													
8. Receipts from central government	5.7			7.2		11.1	96.8	2.2	1.0	76.8				200.8
9. Receipts from local authorities	41.7	3.3	306.2	387.7	27.4	39.6	33.2	156.4	0.2		17.9	15.7	12.5	1,041.8
Total incomings	47.4	3.3	306.2	394.9	27.4	50.7	130.0	158.6	1.2	76.8	17.9	15.7	12.5	1,242.6
10. Transfers to corresponding government activities	46.5	3.3	305.6	375.2	20.5	28.2		136.3		76.8	17.9	15.7	12.5	1,038.5
11. Transfers to corresponding non-profit purposes				6.8		11.5	94.3	2.2	1.2					116.0
12. Fees for pupils at independent and direct-grant schools			0.2	10.8				0.1						11.1
13. Fees for pupils receiving special education	0.2				6.6									6.8
14. Maintenance allowances for pupils over school-leaving age				1.1				0.1						1.2
15. Teacher training awards						10.7								10.7
16. University awards	0.2						35.7							35.9
17. Further education awards for degree or equivalent courses								8.7						8.7
18. Further education awards for other courses								10.8						10.8
19. Other awards and grants			0.4	1.0	0.3	0.3		0.4						2.4
20. International subscriptions	0.5													0.5
Total outgoings	47.4	3.3	306.2	394.9	27.4	50.7	130.0	158.6	1.2	76.8	17.9	15.7	12.5	1,242.6
	c) CAPITAL EXPENDITURE ACCOUNTS													
21. Finance from central government													2.4	2.4
22. Finance from local authorities	1.1	0.2	37.3	61.0	3.6	7.2		28.9		9.9	0.3		3.4	152.9
Total incomings	1.1	0.2	37.3	61.0	3.6	7.2		28.9		9.9	0.3		5.8	155.3
23. Purchases of commodities (capital)	1.1	0.2	37.3	61.0	3.6	7.2		28.9		9.9	0.3		5.8	155.3
Total outgoings	1.1	0.2	37.3	61.0	3.6	7.2		28.9		9.9	0.3		5.8	155.3

headings. Labour inputs are of great importance in all government activities: in the present case, teachers account for nearly half of the total cost; and all forms of labour, for nearly two-thirds.

6.22. The last row of panel (*a*), row 7, relates to loan charges. These charges, mainly interest, are incurred largely in respect of past building programmes and can be interpreted as a crude measure of imputed rent, a measure which could undoubtedly be improved on. Actually, in the SNA no imputation is made in respect of government buildings, and at the national level this decision can be defended on the grounds that the amounts involved are small in relation to the main national aggregates and that the figures are not much used for policy purposes. At a more detailed level, however, these arguments lose their force, since, in forward budgeting, provision should be made for all anticipated future costs, particularly when changes in activity levels are being contemplated.

6.23. The incomings into the purpose accounts of public authorities are shown in the first two rows of panel (*b*), divided between receipts from the central government and receipts from local authorities. In this example the division of the receipts depends on the authority responsible for making the payments and so does not reflect the share of the financial burden borne by the two branches of government.

6.24. The outgoings take four main forms: transfers to the corresponding government activity, row 10, equal to row 2 in panel (*a*); transfers to the corresponding private non-profit purpose, row 11; a variety of transfers to individuals, rows 12 through 19; and international subscriptions, row 20. The transfers to individuals partly find their way back to the finance of educational activities in that they help to pay the fees of private non-profit institutions, which do not, of course, appear in the table. There is, however, no definite correspondence between the two sets of figures: transfers may be intended to cover ordinary living expenses as well as strictly educational expenses; and many fees and contributions paid by individuals are not reimbursed to them by public authorities.

6.25. Panel (*c*) of table 6.1 shows the capital expenditure undertaken in respect of each of the activities distinguished in panel (*a*). In this example the treatment is highly simplified: on the outgoings side there is no subdivision by type of capital good nor any assignment of goods to commodity groups; and on the incomings side it is assumed that the educational activities of public authorities have no financial independence and that the sums they receive on capital account from these authorities correspond exactly to their capital expenditures. In fact these activities are provided on current account with more money than they use to meet their current expenses, with the result that some capital expenditure from revenue takes place: thus of the total of £152.9 million shown in row 22, as much as £21.5 million represent expenditure out of revenue as opposed to expenditure out of loans.

6.26. It would be a simple matter to show this distinction in the system by: raising the entries in rows 2, 9 and 10 by the amount of capital expenditure out of revenue; adding after row 7 a new row, called, say, current surplus, to contain the sums in question subtracting the corresponding amounts from row 22 and moving them to a new row above row 21, called, say, transfers of current surplus. This arrangement would not be justified if the transfers are merely a means of correcting budgeting errors, but would be desirable if individual activities are empowered to decide on the allocation of part of their current revenue to capital expenditure.

B. The production boundary and the output of non-market activities

6.27. The national economic accounts are concerned essentially with production, consumption and accumulation and with their finance. In the SNA, a distinction is made between market-oriented production and the production of services by government agencies and private non-profit institutions, which are not intended for sale although the beneficiaries may be required to make some contribution to their cost. Business establishments lie inside the production boundary and have an output intended for sale which is accounted for. Households, on the other hand, lie outside the production boundary and have no output. The inputs, intermediate and primary, for which they pay (or are deemed to pay) constitute final product and any further transformation they may undergo within the household is not accounted for. Government departments and private non-profit institutions, in their capacity as the producers of goods and services, lie inside the production boundary in the SNA, although what they produce is not sold.

6.28. For any product in this system, the value of output is obtained by multiplying the price per unit by the quantity produced. The movement in the output of groups of products or in the output of all products is measured by means of index-numbers in which indicators of changes in quantity are weighted by values in a base year. Given the form of an index-number, its relevance and accuracy depend on an acceptable basis on which to value products and an acceptable means of measuring the movements in their quantity.

6.29. In the case of standard products traded in competitive markets, these requirements are approximately met. Relative values are likely to be distorted if some branches of production are controlled by monopolies; and the measurement of quantities becomes more difficult as we move to less standardized and more specific products, from pig-iron or steel, say, to motor cars or ships. In practical work, market prices are usually accepted without adjustment and, as the prices enter only into the weights of quantity index-numbers, this convention probably does little harm. The problems of improving on crude measures of quantity are well-known, even if little is done about them in practice, and the more important are discussed in Stone (194) and by the United Nations (255).

6.30. The other end of the spectrum is represented by public goods, the non-marketed products, usually services such as defense, health and education, provided by public authorities. In these cases there is no readily available basis of valuation other than cost and, because nothing is sold, there are no well-recognized units in which to measure quantities. In complicated cases, such as health services, it is likely that any readily accessible unit would not seem equally relevant to producers and consumers. For instance, the output of a particular health service might be measured from the producer's point of view in terms of various acts performed in rendering it, each weighted by the cost involved in performing that act; but a consumer might not find such a measure relevant unless he was persuaded that there was a fixed technical relationship between acts

performed and output in terms of health to be expected. The fact that it is very difficult to define, let alone measure, health does not invalidate this point; it simply means that at best we may not be able to get beyond a producers' measure of output. Furthermore, unless it is believed that the resources available for providing health services are allocated optimally, it is difficult to accept relative costs as a measure of relative values. It might well happen that some services involve a social gain in excess of their cost while others are not worth to society what they cost to provide.

6.31. All this is a far cry from the comparatively simple world of tons of pig-iron and market price per ton; such a far cry that in the measurement of services like health and education little progress has been made beyond input measures of output and the corresponding unit values. Further progress would seem to require that we face the problem of why it is that we want to include the services of non-profit institutions inside the production boundary. The reason is not that we want to make the accounts for these institutions look like the accounts for enterprises but that we want them to be like the accounts for enterprises, in that, by containing entries for gains and losses, they provide information for decisions on the allocation of resources. This implies a measure of the value of output of any branch of the system which is independent of the sum of the costs incurred by that branch.

6.32. Three possible measures of output are described in the next three subsections. In the fourth, these measures are compared in terms of their uses and the difficulties of realizing them.

1. Input measures of output

6.33. In view of the many difficulties in measuring output directly, it is a common practice in services like health and education to measure output in terms of inputs. A gross concept, total output, and a net concept, value added, must be distinguished.

(a) *Total output*

6.34. This measure is formed by taking series of the quantities of all inputs, intermediate as well as primary, and weighting each series by the expenditure on that input in a base year. In some cases, it may be better to form price series for some groups of inputs and derive quantity series by combining price series and value series. Since allowance is not usually made for the current cost of capital inputs, primary inputs are restricted to various kinds of labour. In the case of services like health and education, total output is virtually synonymous with final output, and so the measure just described is also used as a measure of final demand.

(b) *Value added*

6.35. This measure is similar to total output but restricted to primary inputs. It is often suggested that allowance should be made for changes in the productivity of primary inputs, but there is usually no information on which to base such an allowance; clearly it would not be reasonable to impute a productivity change based on the experience of some other branch of the productive system for which productivity measurements can be made. If an allowance is made, coherence requires that it be also included in total output.

2. Producer-oriented measures of output

6.36. This kind of measure is designed to record the acts performed in rendering complex services as opposed to the resources used up in performing these acts. In Britain at any rate, the information available is sufficiently detailed to offer the possibility of measuring and costing acts performed as well as the corresponding inputs. For, in the case of health services, not only is there detailed information on a wide variety of acts (which in the rendering of services can perhaps be regarded as equivalent to products), treatments of many kinds in many types of hospital, visits to various kinds of practitioner, patient-miles travelled by ambulances and so on, but, over much of the field, these separate outputs are costed. Indicators and weights are thus available for outputs as well as for inputs.

6.37. A problem with this approach is to decide at which level of aggregation to define acts. For instance, in looking after a patient for a day in a particular type of hospital or in performing a particular kind of operation, numerous individuals perform a wide variety of acts. It would be difficult if not impossible to collect information about these individual acts and the only reason for trying to do so would be that the standard of patient care in its various forms varies systematically from centre to centre and from decade to decade. If this is the case, the attempt to measure output in terms of aggregations of acts, patient-days, operations performed and so on, may turn out to be inferior to an output measure based on inputs.

6.38. Apart from the particular problem just described, it is clear that this kind of measure is subject to the usual index-number problems. A rational choice requires that both input and output measures of output are made and that the two are compared.

3. Consumer-oriented measures of output

6.39. The approach considered in the preceding subsection has been described as producer-oriented and yet it might well be rejected by many doctors and medical statisticians. It could be argued that all the acts implicitly regarded as final are really intermediate inputs into some final product, health. In principle, this view can hardly be denied but, if it is to lead to an improved measure of output, it must be possible to measure the quantity of health independently of the inputs into, and the acts performed by, the health services.

6.40. It is not difficult to point to partial indicators of a community's state of health: the expectation of life at birth or at any other age; age-specific mortality and morbidity rates; mortality and morbidity rates associated with different diseases; time lost on account of illness; rates of chronic disability and other measurable health conditions; and so on. There are two main obstacles in combining this kind of information into a measure of the output of health services.

6.41. In the first place, the general state of health, however defined, depends on many things besides the output of the health services and all of these may be expected to vary over time. Examples are: measures to promote public hygiene, climatic conditions, dietary habits, the prevalence of lethal instruments like motor cars and of dangerous addictions like those in respect of drugs, alcohol and tobacco, the fluctuations of epidemics and so on. Any attempt to measure the out-

put of the health services by reference to the general state of health presupposes that the influence of such factors as these can be measured and held constant.

6.42. In the second place, assuming that this could be done, there would remain the problems of selecting good indicators of the general state of health and of devising a means of combining them. In other words there would remain the problems of formulating the wants that the community would wish its health services to satisfy and a method of valuing these wants. If we could answer these questions we could set up a general welfare, or utility, function in the limited area of health. Since at present we cannot answer these questions, it is all too easy to dismiss them by saying that people will never agree and that in any case their knowledge of the possibilities is usually much too vague to enable them to express any sensible opinion.

6.43. This attitude is clearly a defeatist one, however justified it may be from a short-term, practical point of view. In trying to break out of our present ignorance, it would seem essential to begin with something much smaller than the whole range of health services: a single programme or even a single establishment.

6.44. If we could establish a utility function, we could try, by means of programming methods, to find the activity levels of the different branches of the health services which would maximize the function subject to constraints of a technical or policy character. We could also work out the unit value (shadow price) of a unit of output from each branch. How well the system was being operated, as judged by the criterion of the utility function, could be assessed by comparing the unit values with the unit costs. The aim of the managers of the system would be to promote "profitable" activities and to curtail "unprofitable" activities. Under optimal management, but only in this case, would unit values and unit costs be equal.

6.45. In this way we should avoid the unjustified assumption, implicit in all input measures of output, that just because money has been spent on inputs an equally valuable output is necessarily obtained.

4. A COMPARISON OF THE THREE MEASURES

6.46. The progression of output measures outlined in the preceding three subsections can be characterized as follows.

6.47. The input measure of output would be the correct one if health services were placed outside the production boundary; that is to say if the institutions producing them were assimilated to households rather than to businesses. This treatment, which leads to an immense practical simplification, would seem quite acceptable where health services are provided by non-profit institutions, public or private. It amounts simply to agreeing that once we have accounted for the inputs, intermediate and primary, which go into health services we do not go on to inquire what use they are put to, any more than we inquire into the use that households make of the goods and services they buy. In the past this treatment has been widely adopted, explicitly or implicitly, but it is not the treatment adopted in the SNA which seeks to emphasize the productive role of non-profit institutions.

6.48. The producer-oriented measure of output would seem to be the correct one if health services were placed inside the production boundary but the only values to be considered were market values. The input measure of output would, in this situation, appear as an approximation in which, because of the difficulty of measuring output, a measure of input was used in its place. This measure would appear somewhat artificial in that if it were adopted no amount of accounting could call in question the present allocation of resources to the different branches of the health services, whatever it might be. The reason is that, because outputs are always valued at cost, no gain or loss can ever be registered in any branch.

6.49. The consumer-oriented measure of output would seem to be the correct one if health services were placed inside the production boundary and it were possible to devise a set of values which would enable decisions to be made on allocation problems. Where services are largely provided by non-profit institutions it is the ultimate measure because there is no point in putting activities inside the production boundary unless doing so provides information for a discussion of the allocation of resources; and this will not be forthcoming unless outputs are valued independently of inputs so that gains and losses can make their appearance in the accounts.

6.50. We have seen what formidable difficulties must be overcome in order to give effect to consumer-oriented measures of output. It is idle to suppose that these can be introduced into the national economic accounts in the near future. The best course would seem to be to continue with the accounts as they are at present and at the same time press on with programming formulations of small parts of the whole system. Only by beginning in this way does there seem any hope of reaching a comprehensive formulation. Such a formulation is desirable because activities are interdependent and their treatment in isolation will, in general, lead to sub-optimal solutions.

C. Output budgeting (PPBS)

6.51. Output budgeting, sometimes known under such titles as functional costing, performance budgeting, or planning-programming-budgeting system, is a form of analysis designed to compare the aims of a complex organization with the costs incurred in realizing these aims. Its essential feature, in the terminology of the SNA, is the crossing of activities and purposes which, at a highly detailed level, can no longer be in one-to-one correspondence. An introduction to the subject, in which it is linked with developments in micro-economics, is given in Williams (282), a detailed application is given in the work of the U.K. Department of Education and Science (228); and a very full review and evaluation of the PPB System is provided in the three volumes of papers submitted to the Joint Economic Committee of the United States Congress (268).

6.52. The first step in output budgeting is to recast the accounts of an organization so that expenditures are classified by the objective, or function, they are intended to serve rather than by the resource or other input purchased. In order to make this classification and use it when it is made, it is necessary to be clear about: (*a*) the objectives of the organization; (*b*) the activities that contribute to the objectives; (*c*) the inputs that are devoted to the activities; and (*d*) the outputs of the activities. The method is therefore closely linked with the subjects discussed in the preceding section.

1. Objectives

6.53. In recasting the accounts, objectives should be defined in terms of ends rather than means, in such a way as to bring out as clearly as possible the alternatives open to the administrator; at the same time attention must be paid to the practicability of allocating inputs and of measuring outputs. These are not easy things to do and an important contribution that the method can make to administration is to force a reconsideration of what the organization is trying to do, the means it is employing to these ends and the effectiveness of these means. A recurrent question is the scale of the modifications in existing arrangements, or programmes, which the method is intended to illuminate. If these are small, the method will be able to handle them, because they are closely related to a mode of operation about which there is plenty of experience; but in this case the outcome is not likely to be very impressive. If, on the other hand, they are large, the method may not be able to handle them for lack of information. It would seem likely therefore that the method will work best when there is agreement that at most moderate changes need to be considered. Care should be taken to ensure that the contemplation of radical changes is not unduly inhibited by it; for instance, if it is said that after at least ten years of compulsory education too many children end up with little knowledge and a positive dislike for school learning, the method is not likely to point the way to a solution.

2. Activities

6.54. In deciding on a classification of activities a start can be made by drawing up detailed accounts on the lines recommended in the SNA. These accounts are standardized for groups of establishments concerned, in the case of education, with primary schools, secondary schools, various institutions of higher education and so on. A second step, also recommended in the SNA, can be taken by separating out and accounting for individually various ancillary services, such as school meals, school health and school transport, so that the purely educational costs of the school system are shown separately. This step is comparatively simple if the ancillary services are institutionalized; but, if they are not, a third step will have to be taken since cost accounting within establishments will be needed to obtain the information. Similar problems arise if science courses are to be distinguished from courses in the humanities in a school or research is to be distinguished from teaching in a university.

6.55. Many problems arise from the need to link many kinds of institution together in order to trace expenditure to the point at which some final product emerges. For instance, in an educational system, administrative and regulatory activities usually take place at three levels: in the educational establishment itself, at the level of local government and in the central ministry of education. No final product is likely to arise at the levels of central and local government and so it is necessary to go down to the school level to appraise the effectiveness of activities and expenditures at the higher levels. Furthermore, many cases will be found of overlapping responsibilities at a single level, as where a police department and a ministry of transport share responsibility for traffic control and road safety. In such cases conformable classifications of expenditures would seem to be essential.

3. Inputs

6.56. With inputs and their costs, the problem is largely one of allocation. Institutions typically incur overhead costs which help to support many, if not all, of their objectives. An example is the cost of possessing and maintaining the office accommodation of a ministry. If such a cost is not allocated, there will be no direct link between the ministry's changing, and frequently expanding, needs for office accommodation and the activities which are giving rise to this increasing need. If on the other hand these costs are allocated they will expand with increasing activity levels independently of whether additional costs are actually incurred. If no allocation is made, fictitious costs will not be introduced into the budget; but at the same time office allocation and the need for more (or less) office space will not be accounted for. Since decisions about accommodation have to be taken from time to time, it would seem desirable that they should be reflected in the budgets. It would always be possible to enter accommodation costs which varied only with the changing expenditure on maintenance and at the same time estimate the rising costs which would have to be incurred if the standards of accommodation were held constant. These would serve to indicate pressures leading to the need to acquire more office space; they would not necessarily indicate the cost of actually doing so.

6.57. A somewhat different problem is raised by the existence of multi-purpose inputs. For instance, in a police department, very few members of the staff will devote their whole time to a single objective of the organization. A quantitative treatment of this particular allocation is provided in Williams (282).

6.58. Finally, while the average cost of different activities is needed for some purposes, marginal cost is a more useful concept for others.

4. Outputs

6.59. The measurement of outputs, discussed at some length in the preceding section, is likely to prove the most difficult problem in using the method of output budgeting. Clearly, in this context, input measures of output are useless; it will not do to begin with a crude measure of output, say number of students, and apply the teacher-student ratio as a correcting factor.

6.60. These difficulties, and in particular the last-mentioned one, deserve to be taken very seriously. New techniques of management, if adopted, are expected to yield results and so there may be a considerable pressure on statisticians and others to devise "useable" measures of output even if these do not express correctly anybody's views of the aims of the system. It should not be assumed that this or any other method can necessarily achieve in practice what is claimed for it in theory; the problem is to find out just how it can be useful.

D. Social costs and benefits

6.61. Just as output-budgeting has arisen out of the special features of the operation of public services, notably that the output is hard to define and measure and, being unsold, has no price independent of its cost, so the somewhat older methods of cost-benefit analysis have arisen out of the problems of appraising large public investment projects. These projects are expensive

and typically have many indirect effects, whether for good or bad, which a public authority can hardly ignore. Hence the need to go beyond the direct costs and expected returns of the project and to investigate the indirect costs and benefits to which it is likely to give rise, whether they affect the project promoter or others.

6.62. Welfare economics can be traced back to the middle of the nineteenth century but the first examples of this particular application appear to have been in the 1930s in connexion with legislation on water resources in the United States. Less than ten years ago an important conference volume was published by the Brookings Institution, Dorfman (52), and, at the same time, a survey of the subject, containing an extensive bibliography, appeared in Prest and Turvey (170). Among the growing literature of recent years reference may be made to Walsh and Williams (275) and a more extended treatment in Little and Mirrlees (128, vol. II). The order of discussion adopted in Walsh and Williams (275) will be followed in the brief account given below.

1. Costs and benefits to be included

6.63. Whereas, in the appraisal of private investment projects, it is usual to consider only the costs and benefits considered relevant by the promoter of the project, in the present case all costs and benefits that accrue to any member of, or group in, society should be included. Thus gains may accrue to individuals or groups from whom it is impossible to exact a financial contribution to the project; conversely, costs, such as labour costs, to the project will not be a cost to society as a whole if the labour would otherwise be unemployed.

6.64. In calculating indirect costs and benefits, care is needed to avoid double counting. For instance, the building of a motorway will alter the pattern of road use and so benefit the proprietors of petrol stations near points of contact with the motorway and harm similar proprietors on roads from which the motorway takes traffic. If an allowance for benefits to road users has been properly made, these individual financial gains and losses are not something additional but represent a redistribution of gains and losses over the members of a particular group in the community.

6.65. As we work out from the immediate effects of a project, we reach a point at which the indirect effects are remote and, as a consequence, often uncertain. In practice, therefore, some costs and benefits that might be attributed to a project must be deemed too remote and uncertain to be included in the analysis.

6.66. As with output budgeting, the choice between average and marginal costs and benefits remains a problem.

2. The valuation of costs and benefits

6.67. Some inputs and outputs are products for which there are market prices. The existence of such prices greatly simplifies the valuation problem, though care is needed especially where the project is large enough to change some of these prices. In other cases it is possible to build up hypothetical prices by means of input-output analysis. For instance, from an engineering study of methods of eliminating pollutants we could work out the unit cost of elimination in each case and use this information to calculate the cost of other products if the cost of eliminating the pollution for which they were directly or indirectly responsible were taken into account. We could also calculate the value of the regular goods and services that would have to be given up in order to free resources for the reduction of the different pollutants to given levels. A more difficult problem would be to value the benefits of this reduction. An attempt could be made to enumerate these and cost them. For instance, a clean air programme might be expected to increase the hours of winter sunshine and so reduce lighting bills; reduce corrosive and toxic materials in the atmosphere and so reduce the bills for painting and cleaning and also for some forms of medical care; improve visibility and so improve the appearance of nature; and so on. Clearly, as we go along the list an objective valuation becomes more and more difficult. However, the point of attempting these valuations is to indicate that the gains which would follow from a programme of pollution control would not be less than the cost. If, in addition, there were some benefits that could not be valued or if the arbitrary value put on these benefits to balance gains and losses were small, there would be no need to go any further. Of course, if after seeing the probable cost, there was general agreement that the programme was desirable, there would be no need to calculate benefits; and the same would presumably be true if it could be demonstrated that everyone would be dead a generation hence unless the programme were put into effect.

3. Discounting the future

6.68. The gains and losses from an investment project are usually spread out over a considerable period, and so the question arises as to whether or not they should all be discounted back to the present and, if so, at what rate of interest. It can be argued that discounting is out of place in the context of social decisions because we should be no less interested in the future than in the present. Writers on cost-benefit analysis, however, generally advocate discounting though they do not agree on the discount rate to be used.

4. Risk and uncertainty

6.69. Expectations are frequently falsified by events, so that some risk inevitably attaches to calculations based on expectations. It also happens that a possibility is envisaged to which no precise expectation can be attached. It is sometimes argued that remote events are inherently more risky and uncertain than events which take place in the immediate future; and this argument is used to justify a higher discount rate, which will reduce the importance in the calculations of more remote events. Against this it may be said that it would be better to bring risk and uncertainty out into the open and, perhaps with the help of sensitivity analysis, force an explicit consideration of these difficulties on the decision-maker, rather than obscure them by the use of an unduly simple device.

5. Who gains and who loses?

6.70. So far, costs and benefits have been discussed in the aggregate and no consideration has been given to the question of which individuals or groups in society gain or lose. Clearly this may be a relevant issue which needs to be taken into account as far as this is possible.

6.71. In spite of the formidable difficulties both of principle and of practice, there can be no doubt that cost-benefit studies are essential. The issues with which they are concerned are important and the types of decision they try to illuminate will inevitably be taken and are likely to be improved if those responsible are forced to quantify costs and benefits as far as possible rather than rely on vague qualitative judgements or personal hunches. There are many technical aspects of this kind of analysis but it is not a purely technical matter. It is concerned with improving decisions in an area which can only be called political and it is essential that the politician and the administrator be as deeply involved in the rationale of the exercise as is the analyst himself.

VII. MODELS OF HUMAN STOCKS AND FLOWS

A. Introduction

7.1. The purpose of this chapter is to describe methods of modelling the progression of human beings through the social system or some part of it. The models to be described are of two main types, which may be termed input-output models and programming models. In what follows, models of the first type are open: that is to say the primary inputs, births and immigrants, are given exogenously. Models of this type are designed to examine the probable outcome of present tendencies and are not concerned with the question of whether this outcome is desirable or undesirable. The second type, programming models, is designed to calculate the outcome that would be judged desirable by some given criterion and to show the steps that would have to be taken if such a desirable outcome were to be brought about.

7.2. These two broad categories of model do not exhaust the possibilities of model building in the context of this report. The first type of model could be formulated as a closed model in which the primary inputs were treated endogenously as in the purely demographic models described, for instance, in Keyfitz (121). Furthermore, there is endless scope for the application of regression analysis in estimating the constants in single equations or in systems of equations. Such methods are, however, well-known and will not be described here.

B. A symbolic version of the general stock-flow matrix

7.3. In sections A.4, 5 and 6 of chapter III above, numerical illustrations were given of a framework for accommodating information on human stocks and flows. This framework takes the form of a matrix in which "our country" is distinguished from the "outside world" and in which the flow entries add downwards to give the opening stocks and across to give the closing stocks. It is set out symbolically in table 7.1 below.

Table 7.1. A demographic matrix connecting the opening and closing stocks of year θ with the flows during year θ

State at new year θ / State at new year $\theta + 1$	Outside world	Our country: opening states	Closing stocks
Outside world	a	$\mathbf{d}'$	
Our country: closing states	$\mathbf{b}$	S	$\Lambda\mathbf{n}$
Opening stocks		$\mathbf{n}'$	

7.4. The symbols in this table have the following meaning:

a, a scalar, denotes the total number of individuals who both enter and leave "our country" in the course of year θ, and so are not recorded in either the opening or the closing stock of that year. An example is a baby born during the year who dies before the end of it. Scalars are represented by lower case Greek or Roman italic letters.

$\mathbf{b}$, a column vector, denotes the new entrants into "our country", namely the births and immigrations of year θ, who survive to the end of the year. Individuals in this group are recorded in the closing stock but not in the opening stock. Vectors are represented by lower case bold letters throughout this report.

$\mathbf{d}'$, a row vector (the prime superscript indicates transposition), denotes the leavers from "our country", namely the deaths and emigrations of year θ. Individuals in this group appear in the opening stock but not in the closing stock.

S, a square matrix, denotes the survivors in "our country" through year θ, and these are recorded in both the opening and the closing stock. They are classified by their opening states in the columns and by their closing states in the rows. Regular matrices are represented by capital italic letters throughout this report and diagonal matrices other than the unit matrix by lower case bold Roman letters with a hat. By common convention, I, not $\hat{\mathbf{1}}$, denotes the unit matrix.

$\mathbf{n}'$, a row vector, denotes the opening stock in each state.

$\Lambda\mathbf{n}$, a column vector, denotes the closing stock in each state. The symbol Λ denotes the shift operator defined by the relationship $\Lambda^{\tau}\,\mathbf{n}\,(\theta) = \mathbf{n}\,(\tau + \theta)$. Such operators are represented by capital Greek letters.

7.5. This form of presentation is quite general; the information we can obtain from it depends on the classifications used to define states. For many purposes we should wish to treat males and females separately and to record individuals by year of birth or by age group. Apart from these general criteria of classification, additional specific criteria would depend on the aspect of life we were studying. For instance, if we were interested in the flow of students through the educational system, the specific criteria might be level and type of establishment attended, stage of work (for example, first or second stage of secondary school), subject of study and qualifications obtained at different stages of the education progression; if we were interested in the changing conditions of health over the life cycle, the specific criteria might be conditions predisposing to some disease, presence of the disease, method of treatment and degree of incapacity; and if we were interested in the movement of employees through an organization, the specific criteria might be occupation and grade.

C. Input-output models based on outflow coefficients (transition proportions)

7.6. Input-output models in economics are usually based on input coefficients (cost proportions), although

it is possible to base these models on output coefficients (sales proportions). Conversely, input-output models in social demography are usually based on outflow coefficients (transition proportions) although, as we shall see in the following section, it is possible to base these models on inflow coefficients (admission proportions).

1. Simple quantity models

7.7 From the row for our country in table 7.1, we can write

$$\Lambda \mathbf{n} \equiv S\mathbf{i} + \mathbf{b} \qquad \text{(VII.1)}$$

where $\mathbf{i}$ denotes the unit vector, so that $S\mathbf{i}$ denotes the row sums of S. If we derive a coefficient matrix, C say, by dividing the elements in the columns of S by the corresponding element in the opening stock, $\mathbf{n}$, we obtain

$$C = S\hat{\mathbf{n}}^{-1} \qquad \text{(VII.2)}$$

where the circumflex accent indicates that the vector $\mathbf{n}$ is spread out to form a diagonal matrix. If we substitute for S from (VII.2) into (VII.1), we obtain

$$\begin{aligned} \Lambda \mathbf{n} &= C\hat{\mathbf{n}}\mathbf{i} + \mathbf{b} \\ &= C\mathbf{n} + \mathbf{b} \end{aligned} \qquad \text{(VII.3)}$$

7.8. The elements of C are usually called transition proportions and, provided they remain constant (or their future movements can be estimated), (VII.3) can be used for making projections contingent on a knowledge of the future values of the exogenous vector, $\mathbf{b}$. If we apply the operator Λ to (VII.3), we obtain

$$\begin{aligned} \Lambda^2 \mathbf{n} &= C\Lambda \mathbf{n} + \Lambda \mathbf{b} \\ &= C^2\mathbf{n} + C\mathbf{b} + \Lambda \mathbf{b} \end{aligned} \qquad \text{(VII.4)}$$

on substitution from (VII.3) for $\Lambda \mathbf{n}$. If we continue in this way, we can write in general

$$\begin{aligned} \Lambda^\tau \mathbf{n} &= C^\tau \mathbf{n} + \sum_{\theta=0}^{\tau-1} C^\theta \, \Lambda^{\tau-\theta-1} \mathbf{b} \\ &= C^\tau \mathbf{n} + \sum_{\theta=1}^{\tau-1} C^\theta \, \Lambda^{\tau-\theta-1} \mathbf{b} + \Lambda^{\tau-1} \mathbf{b} \end{aligned} \qquad \text{(VII.5)}$$

where the alternative form shown in the second row is given for comparison with the second row of (VII.7).

7.9. In most practical applications it will be found that some of the elements of the C-matrix change over time. For instance, in the last generation more children have tended to stay on at school after the school-leaving age and to stay on for longer; and more of them enrol in teacher-training colleges, universities and the like.

7.10. Let us suppose that we have some means of projecting the elements of C and let us denote this matrix β periods from now by $\Lambda^\beta C$. Then the series $C, C^2, C^3, \ldots$ will have to be replaced by $C, \Lambda C.C, \Lambda^2 C.\Lambda C.C, \ldots$. In this notation, (VII.4) and (VII.5) become

$$\begin{aligned} \Lambda^2 \mathbf{n} &= \Lambda C \, \Lambda \mathbf{n} + \Lambda \mathbf{b} \\ &= (\Lambda C.C)\mathbf{n} + \Lambda C \, \mathbf{b} + \Lambda \mathbf{b} \end{aligned} \qquad \text{(VII.6)}$$

and

$$\begin{aligned} \Lambda^\tau \mathbf{n} &= \prod_{\beta=0}^{\tau-1} \Lambda^\beta C \mathbf{n} + \sum_{\theta=1}^{\tau-1} \left[\prod_{\beta=\tau-1}^{\tau-\theta} \Lambda^\beta C \right] \Lambda^{\tau-\theta-1} \mathbf{b} + \Lambda^{\tau-1} \mathbf{b} \\ &= \overline{C}^\tau \mathbf{n} + \sum_{\theta=1}^{\tau-1} \Lambda^{\tau-\theta} \, \overline{C}^\theta \, \Lambda^{\tau-\theta-1} \mathbf{b} + \Lambda^{\tau-1} \mathbf{b} \end{aligned} \qquad \text{(VII.7)}$$

where Π denotes the operation of forming a product and

$$\overline{C}^\theta = \prod_{\beta=0}^{\theta-1} \Lambda^\beta C \qquad \text{(VII.8)}$$

In (VII.5) the multiplier of $\Lambda^{\tau-\theta-1}\mathbf{b}$ is C^θ and in (VII.7) this multiplier is replaced by $\Lambda^{\tau-1} C.\Lambda^{\tau-2} C \ldots \Lambda^{\tau-\theta} C$.

7.11. Writing, as is usual, I for the unit matrix, that is a diagonal matrix with ones in the leading (or principal) diagonal and zeros elsewhere, let us denote by $(I - \bar{C})^{-1}$ the expression which, with changing coefficients, is comparable to $(I - C)^{-1}$ with fixed coefficients. Then just as

$$(I - C)^{-1} = I + \sum_{\theta=1}^{\infty} C \qquad \text{(VII.9)}$$

so

$$(I - \bar{C})^{-1} = I + \sum_{\theta=1}^{\infty} \overline{C}^\theta \qquad \text{(VII.10)}$$

where $\overline{C}^\theta$ is defined by (VII.8). From (VII.10) it follows that

$$\bar{C} = I - \left[I + \sum_{\theta=1}^{\infty} \overline{C}^\theta \right]^{-1} \qquad \text{(VII.11)}$$

The summations in (VII.9) and (VII.10) do not extend beyond the number of years in the human life-span, since, for higher values of θ, C^θ and $\overline{C}^\theta$ are identically zero.

7.12. The effect of using $\bar{C}$ in place of C can readily be described. If we work with $(I-C)^{-1}$ based on data for, say, 1965, the babies born in that year implicitly have the same expectations at, say, age 18, that is in 1983, as had the 18-year-olds of 1965; whereas, if we work with $(I-\bar{C})^{-1}$, these expectations are updated to 1983, bearing in mind the changes at intermediate ages that now seem likely to take place between the two dates.

2. Some special cases of the quantity model

7.13. If the population is in stationary equilibrium $\Lambda^\theta \mathbf{b} = \mathbf{b}$ and $\Lambda^\theta \mathbf{n} = \mathbf{n}$. In this case we can write (VII.3) in the form

$$\begin{aligned} \mathbf{n} &= C\mathbf{n} + \mathbf{b} \\ &= (I - C)^{-1} \mathbf{b} \end{aligned} \qquad \text{(VII.12)}$$

which is formally identical to the basic equation of an open input-output model in economics. In this case, however, the matrix multiplier $(I - C)^{-1}$ transforms the primary input vector, $\mathbf{b}$, into the total population vector, $\mathbf{n}$.

7.14. Let the values of $\mathbf{b}$ and $\mathbf{n}$ in the initial period of stationary equilibrium be denoted by $\mathbf{b}_0$ and $\mathbf{n}_0$ and suppose that $\Lambda^\theta \mathbf{b} = \mathbf{b}_1$ for $\theta > 0$. Then (VII.5) simplifies to

$$\begin{aligned} \Lambda^\tau \mathbf{n} &= C^\tau \mathbf{n}_0 + \sum_{\theta=0}^{\tau-1} C^\theta \, \mathbf{b}_1 \\ &= C^\tau \mathbf{n}_0 + (I - C^\tau)(I - C)^{-1} \mathbf{b}_1 \\ &= C^\tau \mathbf{n}_0 + (I - C^\tau) \, \mathbf{n}_1 \end{aligned} \qquad \text{(VII.13)}$$

Since $C^\theta = 0$ for all values of θ which exceed the human life span, we can see from (VII.13) that a single, sustained step in $\mathbf{b}$ will completely work itself out in one human life span, during which time the population vector will be a changing weighted sum of the elements of the initial and final population vectors, $\mathbf{n}_0$ and $\mathbf{n}_1$.

7.15. A second case which is of some interest arises if, at the end of the period of stationary equilibrium, $\mathbf{b}$ grows in geometric progression at an annual rate of ρ. In this case, writing $C^* \equiv C/(1+\rho)$, we can see that

$$\Lambda^\tau \mathbf{n} = C^\tau \mathbf{n}_0 + (1+\rho)^{\tau-1} \sum_{\theta=0}^{\tau-1} C^{*\theta}\, \mathbf{b}_0$$

$$= C^\tau \mathbf{n}_0 + (I - C^{*\tau})\,(I - C^*)^{-1}\,(1+\rho)^{\tau-1}\mathbf{b}_0 \qquad \text{(VII.14)}$$

7.16. If, from an initial value of $\mathbf{b}_0$, the elements of $\mathbf{b}$ are to move along sigmoid paths, it does not seem possible to obtain simple expressions like (VII.13) and (VII.14). However, from a computational point of view, this complication presents little difficulty. For instance, if the elements of $\mathbf{b}$ are all to grow along logistic curves, then we can write

$$\Delta \mathbf{b} = \hat{\mathbf{r}}\,(\hat{\mathbf{b}}^* - \hat{\mathbf{b}})\,\mathbf{b} \qquad \text{(VII.15)}$$

where $\Delta \equiv \Lambda - 1$ denotes the first difference operator, $\mathbf{r}$ is a vector of constants and the elements of $\mathbf{b}^*$ are the upper bounds of the corresponding elements of $\mathbf{b}$. From (VII.15)

$$\Lambda \mathbf{b} = [I + \hat{\mathbf{r}}\,(\hat{\mathbf{b}}^* - \hat{\mathbf{b}})]\,\mathbf{b} \qquad \text{(VII.16)}$$

and so, starting with $\mathbf{b} = \mathbf{b}_0$, we can work out $\Delta\mathbf{b}$ from this expression, insert it in (VII.4) and continue.

3. The C-matrix as a probability matrix

7.17. At the beginning of the preceding subsection, the C-matrix was compared with the coefficient matrix of an open input-output model in economics. This is a valid comparison which, as we shall see in section C.5 below, enables us to relate quantities to costs or prices. But, in the present context, something more is needed: it must be possible to interpret the C-matrix as a probability matrix. This means that the transition probabilities from state j are the same for all individuals in that state. If this assumption is valid then the process that is being modelled can be interpreted as a Markov process and the matrix multiplier $(I - C)^{-1}$ can be interpreted as the fundamental matrix of an absorbing Markov chain, as demonstrated for instance in Kemeny and Snell (117).

7.18. If this assumption is to be even approximately valid, a good deal of care is needed in defining states, that is to say in specifying the classifications on which those definitions rest. Some examples will now be given of the difficulties that may arise and the ways in which they can be overcome.

(a) *Non-homogeneous populations*

7.19. A population may be made up of distinct groups, whites and non-whites for instance, and in a study of social mobility the transition probabilities may be quite different for the two groups. In this case, social mobility can only be studied for each group separately. If the importance of the basic assumption is not appreciated and a pooled matrix is used, the outcome will depend on the relative sizes of the two groups. If one group constitutes almost the whole of the population, then calculations based on a pooled matrix will provide an almost unbiased analysis of the mobility of the dominant group but it will not be valid for the population as a whole.

(b) *All-age transition matrices*

7.20. Transition proportions can be calculated from stock-flow matrices, like table 3.4 above, which provide no information about age. If the population has long been in a state of stationary equilibrium, no difficulty will arise on this score. In practice this is most unlikely to be the case; in most countries the population has been growing more or less steadily for a long time. The consequence of this can be seen by considering column 8 of table 3.4 which relates to the male labour force other than teachers. The 162,400 men who are shown as retiring were mostly born around the beginning of the century, when the population was much smaller than it was in 1965-66; whereas the 62,000 who are shown as returning to some form of higher education were probably born around the end of the 1930s. As a result, the elements in this and other columns do not refer to populations of constant sizes and so do not provide a basis for calculating probabilities. An approximate method of resolving this difficulty is suggested in Stone (201).

(c) *Transitions dependent on the past*

7.21. The basic assumption, that the probabilities of movement are the same for all the members of a given state, may not be valid if states are defined solely in terms of the current characteristics of individuals. For instance, if we are studying the movement of patients through the branches of a system of medical care, it may or may not be the case that patients with a certain kind of illness who have been referred for out-patient treatment all have the same probability of being next referred for inpatient treatment. It is quite likely that this probability will be influenced by their earlier medical history, in which case a valid analysis requires that states are defined in terms of a combination of current and past characteristics. With longitudinal data, this requirement can in principle always be met.

7.22. A simple example will make this clear. In the health sequence we may wish to take account of states of health at earlier stages of life. If the medical categories consist of the dichotomy well or ill, there will be two states at the first stage. At the second stage, those who were well at the first stage would be classified according as they were now well or ill, and those who were ill at the first stage would be classified in the same way. Thus, at the second stage there would be four states and at stage τ there would be 2^τ states. In practice such matrices are likely to be large but, as we shall see in the following subsection, they take a special form which simplifies the calculation of the fundamental matrix, $(I - C)^{-1}$.

4. Forms of the fundamental matrix

7.23. The inversion of very large matrices is difficult and costly unless they take a special form. In view of what has just been said, it is worthwhile to consider the forms of C-matrix that are likely to be met with in practice.

(a) *All-age matrices*

7.24. There is little to be said in this case: the inverse $(I - C)^{-1}$ derived from such a matrix can only be calculated by applying one of the standard methods. It should be noted that such a matrix cannot be restricted to survivors since, if it were, all columns sums of $(I - C)$ would be zero and so $(I - C)$ would be singular.

(b) *Matrices in which the interval between observations is equal to an age group*

7.25. An example of such a matrix is one in which age is defined by year of birth and observations are made at the beginning of each year. In this case all non-zero elements of C are to be found in the submatrices in the leading sub-diagonal.

7.26. Suppose, first, that the categories to which individuals are assigned are the same at all ages so that the submatrices are square and could be denoted by C_{21}, C_{32}, ... Suppose further that all these submatrices are the same matrix, C_{rs} say. Then, if we observed the first three ages, we should have

$$C = \begin{bmatrix} 0 & 0 & 0 \\ C_{rs} & 0 & 0 \\ 0 & C_{rs} & 0 \end{bmatrix} \qquad \text{(VII.17)}$$

and

$$(I - C)^{-1} = \begin{bmatrix} I & 0 & 0 \\ C_{rs} & I & 0 \\ C_{rs}^2 & C_{rs} & I \end{bmatrix} \qquad \text{(VII.18)}$$

If we imagine life continuing far beyond the first three ages (or age groups), but always with the same transition probabilities, C_{rs}, the sum of the elements in each column of (VII.18) will converge to $I + C_{rs} + C_{rs}^2 + \ldots = (I - C_{rs})^{-1}$ unless $(I - C_{rs})$ is singular. But the singularity of $(I - C_{rs})$ does not imply the singularity of $(I - C)$ whose inverse can be calculated in the simple manner shown in (VII.18). This shows that transition probabilities can be restricted to survivors.

7.27. If $C_{21} \neq C_{32}$ then (VII.18) is replaced by

$$(I - C)^{-1} = \begin{bmatrix} I & 0 & 0 \\ C_{21} & I & 0 \\ C_{32}C_{21} & C_{32} & I \end{bmatrix} \qquad \text{(VII.19)}$$

which can also be calculated without difficulty.

7.28. The form of the inverse is not effectively altered if the number of categories changes with age, as a consequence for instance of introducing the categorization suggested in paragraph 7.22 above. The only difference is that the submatrices would be rectangular rather than square.

(c) *Matrices in which the interval between observations is less than an age group*

7.29. An example of such a matrix is one in which observations relate to a year but age groups are, say, ten years in length, so that an individual only moves to a new age group every tenth year. Here, again, two cases can be distinguished.

7.30. An individual is assigned to a category, medical or other, on entering an age group and remains in that category until he enters the next age group. In this case

$$C = \begin{bmatrix} \hat{c}_{11} & 0 & 0 \\ C_{21} & \hat{c}_{22} & 0 \\ 0 & C_{32} & \hat{c}_{33} \end{bmatrix} \qquad \text{(VII.20)}$$

and

$$(I - C)^{-1} = \begin{bmatrix} (I-\hat{c}_{11})^{-1} & 0 & 0 \\ (I-\hat{c}_{22})^{-1}C_{21}(I-\hat{c}_{11})^{-1} & (I-\hat{c}_{22})^{-1} & 0 \\ (I-\hat{c}_{33})^{-1}\ C_{32}(I-\hat{c}_{22})^{-1}C_{21}(I-\hat{c}_{11})^{-1} & (I-\hat{c}_{33})^{-1}C_{32}(I-\hat{c}_{22})^{-1} & (I-\hat{c}_{33})^{-1} \end{bmatrix} \qquad \text{(VII.21)}$$

Since in (VII.21) the only matrices to be inverted are diagonal and since this only involves taking the reciprocals of the diagonal elements, this inverse can be built up by taking reciprocals and by systematic matrix multiplication.

7.31. Alternatively, an attempt can be made to measure the movement between categories within age groups. The effect of this will be that the typical diagonal element of (VII.20), $\hat{c}_{rr}$ say, will be replaced by a general matrix, C_{rr} say, and this will carry down into (VII.21) to give $(I - C_{rr})^{-1}$ in place of $(I - \hat{c}_{rr})^{-1}$. This may lead to difficulties where past states are allowed for since, with μ categories at each stage and τ stages, the order of the largest general matrix to be inverted may be as large as μ^τ.

5. The Price Equation

7.32. In economic input-output analysis, as is well known, a quantity equation of the form of (VII.9) is matched by a price equation whose matrix multiplier, $(I-C')^{-1}$, involves the transpose of the C-matrix. The analogue in the present case will now be described, using education as an example.

7.33. Let $\mathbf{m}$ denote a vector whose elements measure the educational costs that must be incurred this year to educate an individual now in a given state of the system. On the assumption that $\mathbf{m}$ remains fixed in the future, the total cost to be incurred from now on to educate, or complete the education of, an individual now in a given state is an element of a vector, $\mathbf{k}$ say, where

$$\begin{aligned} \mathbf{k} &= \mathbf{m} + C'\mathbf{m} + C'^2\mathbf{m} + \ldots \\ &= \mathbf{m} + C'\mathbf{k} \\ &= (I - C')^{-1}\,\mathbf{m} \end{aligned} \qquad \text{(VII.22)}$$

The terms on the right-hand side of the first row of (VII.22) relate to the successive years in which educational costs will be incurred. The elements of these vectors relate to the present states of individuals multiplied by the probable educational costs they will incur this year, next year and so on.

7.34. If it is expected that units costs will change so that, in year θ, $\mathbf{m}$ will be replaced by $\Lambda^\theta\mathbf{m}$, then (VII.22) becomes

$$\begin{aligned} \mathbf{k} &= \mathbf{m} + C'\Lambda\mathbf{m} + C'^2\Lambda^2\mathbf{m} + \ldots \\ &= \mathbf{m} + C'\Lambda\mathbf{k} \\ &= (I - C'\Lambda)^{-1}\,\mathbf{m} \end{aligned} \qquad \text{(VII.23)}$$

Thus if we can estimate $\Lambda^\theta \mathbf{m}$ for the relevant values of θ, we can allow for changing costs.

7.35. If it is also expected that the C-matrix will change, C^θ must be replaced by $\bar{\bar{C}}^\theta \equiv \Lambda^{\theta-1}C.\ \Lambda^{\theta-2}C \ldots C$, and so (VII.23) becomes

$$\begin{aligned}\mathbf{k} &= \mathbf{m} + \bar{\bar{C}}'\Lambda\mathbf{m} + \bar{\bar{C}}'^2\Lambda^2\mathbf{m} + \ldots \\ &= (I - \bar{C}'\Lambda)^{-1}\mathbf{m} \qquad \text{(VII.24)}\end{aligned}$$

where $\bar{C}$ is defined as in (VII.16). Thus if we can estimate $\Lambda^\theta C$ for the relevant values of θ, we can allow for changing transition probabilities.

7.36. If ρ denotes the rate of interest, then $\sigma \equiv 1/1(1+\rho)$ denotes the discount factor; and if the states of C are separated by annual intervals (as would be the case if year of birth were the primary criterion of classification) it is easy to calculate the discounted streams of future costs corresponding to (VII.22). If $\tilde{\mathbf{k}}$ denotes the vector of discounted accumulated costs and if $\tilde{C} \equiv \sigma C$, then (VII.22) is replaced by

$$\tilde{\mathbf{k}} = (I - \tilde{C}')^{-1}\mathbf{m} \qquad \text{(VII.25)}$$

If we have calculated the inverse in (VII.22), we can easily calculate the inverse in (VII.25) since

$$(I - \tilde{C}')^{-1} \equiv \hat{\mathbf{s}}(I - C')^{-1}\hat{\mathbf{s}}^{-1} \qquad \text{(VII.26)}$$

where the elements of $\mathbf{s}$ are descending powers of σ, a power being repeated for states reached in the same number of time intervals from a fixed point in time. For instance, consider a system of four states which is spread over three time intervals such that the first two states occur respectively in the first and second time intervals and the last two states are alternatives which occur in the last time interval. In this case

$$\mathbf{s} = \{\sigma^2 \quad \sigma \quad 1 \quad 1\} \qquad \text{(VII.27)}$$

6. A FUNDAMENTAL IDENTITY

7.37. For a population in stationary equilibrium in which the educational unit costs in each state are constant, (VII.9) and (VII.22) can be combined to yield

$$\begin{aligned}\mathbf{m}'\mathbf{n} &\equiv \mathbf{k}'(I - C)(I - C)^{-1}\mathbf{b} \\ &\equiv \mathbf{k}'\mathbf{b} \qquad \text{(VII.28)}\end{aligned}$$

that is to say, this year's total expenditure on education, $\mathbf{m}'\mathbf{n}$, is equal to the total future cost of educating this year's new entry, $\mathbf{k}'\mathbf{b}$.

D. Input-output models based on inflow coefficients (admission proportions)

7.38. The models described in the preceding section link the closing stock vector to the entrants in the preceding interval of time and so are forward-looking. The quantity equation enables us to make forward projections of human stocks, as in (VII.5) and (VII.7); and the price equation, of which the simplest variant is (VII.22), relates the total cost of completing some sequence of activities to the cost that is now being incurred.

7.39. The models to be described in this section link the opening stock vector to the leavers in the succeeding interval of time and so, in terms of human movements, are backward looking. The quantity equation enables us to trace the earlier states occupied by a group of individuals now in a given state; and the price equation enables us to calculate the accumulated past costs embodied in an individual now in a given state.

7.40. Backward models can be given an entirely different interpretation if we concentrate on the movement of vacancies rather than on the movement of individuals. For a stationary system in which existing posts are not destroyed and new posts are not created, the flow of individuals in one direction is matched by a flow of vacancies in the opposite direction. In particular, the disappearance of an individual from the system is matched by the appearance of a vacancy; and the appearance of an individual in the system can only be in response to the existence of a vacancy which will thereby disappear. This way of regarding movements is adopted in White (279) where he studies the consequences of the appearance of vacancies in church hierarchies.

1. THE QUANTITY EQUATION

7.41. If we go back to table 7.1, we can derive from the column for our country an equation of the form

$$\mathbf{n} \equiv S'\mathbf{i} + \mathbf{d} \qquad \text{(VII.29)}$$

Let us define a coefficient matrix, G' say, based on the rows of S. Then

$$G' = S'\Lambda\hat{\mathbf{n}}^{-1} \qquad \text{(VII.30)}$$

whence, on substitution for S' from (VII.30) into (VII.29), we obtain

$$\mathbf{n} = G'\Lambda\mathbf{n} + \mathbf{d} \qquad \text{(VII.31)}$$

which can be compared with (VII.3). If (VII.31) relates to a population in stationary equilibrium, then we can write

$$\begin{aligned}\mathbf{n} &= G'\mathbf{n} + \mathbf{d} \\ &= (I - G')^{-1}\mathbf{d} \qquad \text{(VII.32)}\end{aligned}$$

which has the same form as (VII.12) but connects $\mathbf{n}$ with $\mathbf{d}$ rather than with $\mathbf{b}$. By equating the right-hand sides of (VII.12) and (VII.32) we can see that

$$\mathbf{d} = (I - G')(I - C)^{-1}\mathbf{b} \qquad \text{(VII.33)}$$

which relates leavers to new entrants in the case of a population in stationary equilibrium.

7.42. *Mutatis mutandis*, the backward quantity model can be elaborated as was the forward quantity model in the preceding section.

2. THE PRICE EQUATION

7.43. In this case the price equation can be expressed in the form

$$\mathbf{l} = G\Lambda^{-1}\mathbf{l} + \mathbf{m} \qquad \text{(VII.34)}$$

in which $\mathbf{m}$ has the same meaning as in (VII.22), and $\mathbf{l}$ is a vector each of whose elements represents, in the educational case, the total educational costs incurred on average in reaching a given state. Like the quantity equation, this equation can also be elaborated as indicated in the preceding section.

3. The identity

7.44. For a population in stationary equilibrium in which unit educational costs in each activity are constant, (VII.31) and (VII.34) can be combined to yield

$$\mathbf{m'n} \equiv \mathbf{l'}\,(I - G')(I - G')^{-1}\,\mathbf{d} \equiv \mathbf{l'd} \qquad \text{(VII.35)}$$

that is to say, this year's expenditure on education, $\mathbf{m'n}$, is equal to the total past costs of educating this year's leavers, $\mathbf{l'd}$.

E. Other models based on fixed coefficients

7.45. The models described in the two preceding sections are of a general character and they, or some variant of them, have been applied in many fields of social analysis. Before we go on to consider programming models, we ought to bear in mind that many other models based on fixed coefficients can be formulated. But these are specific to particular fields and so this whole range of models cannot be described briefly. However, without going into details, one example will be given: the manpower requirements model of educational planning.

7.46. The aim of this kind of model is to link the future development of the educational system to the expected manpower needs of the economy. Briefly, estimates of output levels in the future are translated into demands for labour classified by occupation, and an ideal educational formation is associated with each occupation. This information, combined with data on existing stocks and expected retirement rates, is used to estimate the number of people with different qualifications who should emerge from the educational system at different dates in the future.

7.47. This method supplies the basis for educational planning in a number of countries. It is described in detail in a series of reports emerging from the Mediterranean Regional Project, see for instance Parnes (162), OECD (154) and Hollister (105), which was sponsored by the OECD and embraced six of its member countries: Greece, Italy, Portugal, Spain, Turkey and Yugoslavia. A simplified and aggregated model which has much in common with this method has been put forward in Correa and Tinbergen (48) and in Tinbergen, Bos and others (217). In the second of these works applications are made to Greece, Spain and Turkey by Williams, Emmerij and Blum respectively.

7.48. Many of the difficulties of this approach, such as the projection of future output and employment levels, are common to all economic planning models. In addition, it is necessary to link future labour inputs into different branches of production with levels of education *via* estimates of the future occupational mix in each branch and the educational level deemed appropriate in each occupation. These are not easy matters, since occupational mixes may change quickly in response to technical change and in many areas there seems to be little association between occupation and education.

F. Programming models

7.49. The kind of model now to be described is quite different from those set out in the preceding three sections. In them, exogenous data, such as a projected series of births or future output levels estimated from an economic model, are combined with relationships with supposedly known coefficients, such as projected transition proportions, to calculate the endogenous variables of the model, such as the future numbers in the various branches of the educational system. In programming models, on the other hand, an objective (or welfare) function is formulated and this function is maximized subject to a number of constraints. For instance, we might specify the contribution of the educational system to the future national income and then attempt to maximize this contribution subject to such constraints as the capacity levels of the different branches, which of course can be increased by constructing educational buildings and training teachers, and the minimum qualifications that a student is required to have for admission to each particular branch.

7.50. The problem just outlined can be formalized as a multi-stage linear programme. This was done in Bowles (35) and applied to the educational system of Northern Nigeria. Many problems of optimization cannot be expressed in linear programming form but require an appeal to dynamic programming, see Bellman (20), or the maximum principle, see Pontryagin and others (167). An example using the second of these techniques is provided in Weizsäcker (277) where an analysis is made of the optimal allocation of time between learning and earning from the end of compulsory education to the age of retirement. These two models exemplify the problems met with in this area and will now be briefly described.

1. An application of linear programming

7.51. Reduced to its simplest terms, the educational planning model elaborated by Bowles can be expressed in the usual linear programming terms, namely

$$\text{Maximize } \omega = \mathbf{c'q} \qquad \text{(VII.36)}$$

subject to

$$A\mathbf{q} \leqslant \mathbf{b} \qquad \text{(VII.37)}$$

and

$$\mathbf{q} \geqslant 0 \qquad \text{(VII.38)}$$

7.52. The first of these equations defines the objective (or welfare) function, ω, which is to be maximized as the sum of the quantities each multiplied by a constant, $\mathbf{c'q}$. Some of the constants represent discounted gains and others, which enter negatively in (VII.36), represent discounted costs.

7.53. The second and third equations represent constraints. Equation (VII.38) states that the quantities must all be non-negative: we cannot have a negative number of admissions, enrolments, teachers, buildings and so on. Equation (VII.37) places restrictions on the quantities which arise from the working of the system: for instance the number of admissions to a particular kind of school cannot exceed the system's output in the preceding year of students with the requisite qualifications.

7.54. The highly condensed notation of paragraph 7.51 is fully spelt out in Bowles (35) and will now be summarized verbally.

7.55. The model relates to ten branches of education over a planning period of eight consecutive years subject to suitable terminal conditions. The right-hand side of (VII.36) contains terms of two quite different types. The first and more important type relates to the excess over the educational costs involved and earnings foregone of the expected net discounted life-time

earnings of students admitted to each of the ten branches in each of the eight years. In this context net earnings signifies the earnings attributable to passing through a branch, that is to say the earnings expected on leaving a branch less the earnings expected by a student who had not passed through it. The second kind of term, which enters negatively, is the cost of the new places provided in each branch in each year. The welfare to be maximized is interpreted as the contribution over the planning period of the educational system to the future national income.

7.56. The first set of constraints embodied in (VII.37) relates to teachers. In any year of the planning period the number of teachers of a given type required throughout the system cannot exceed the sum of the following three terms: (*a*) the number surviving from the initial stock at the beginning of the planning period; (*b*) the number trained in the part of the planning period completed; and (*c*) the number of former or foreign teachers recruited in the particular year.

7.57. The second set of constraints relates to students. In any year of the planning period, the admissions to a branch cannot exceed the number emerging in the preceding year with the necessary qualifications from other branches of the system.

7.58. The third set of constraints relates to buildings. In any year of the planning period the buildings required by the enrolments in each branch of the system cannot exceed the stock available at the beginning of the planning period plus the subsequent new construction.

7.59. The remaining constraints are of various kinds. The demand for goods supplied exogenously cannot exceed the available supply. There are likely to be limits to the recruitment of former and foreign teachers. There may well be political and administrative limits to the acceptable growth or decline of admissions into various branches.

7.60. The terminal conditions at the end of the planning period are also a form of constraint and call for careful consideration. For instance if the courses in a particular branch of the system take three years to complete, no-one will be allowed to enter this branch within three years of the end of the planning period since, if he did, he could not complete his course within the period and so there would be no gain until later to set against the costs incurred during the planning period. Any model with a finite horizon operates on the maxim *après moi le déluge*, and so steps must be taken to ensure continuity into the subsequent planning period. There are many ways in which this can be done but they will not be described here.

7.61. Although, as we have just seen, care is needed in the formulation of constraints, because a model is bound to take them literally and cannot apply common sense to their imperfections, the formulation of an objective function is likely to give rise to even greater difficulties.

7.62. For instance, some of the elements of $\mathbf{c}$ in (VII.36) represent the expected gains from different kinds of education. These are usually estimated by reference to the earnings in a particular period of individuals of different ages with different educations. For this to provide an appropriate measure, several conditions must be satisfied: there must be a substantial degree of correspondence between the earnings of different kinds of labour and their marginal productivities; the additional earnings associated with additional education must be attributable to that education and not to other characteristics of an individual, such as his family background; and so on.

7.63. A problem of a somewhat different kind also arises in connection with the objective function. In the version that has just been given this function is wholly concerned with economic efficiency, so that the gain of £1 is the gain of £1 and it does not matter whether the corresponding income accrues to an individual earning £100 or £10,000 a year. However, the extra £1 is likely to mean more to the first man than to the second. The best means of introducing this consideration into the analysis is an open question, but some weight will be given to it if income is replaced by log income.

7.64. Equations (VII.36) through (VII.38) are often termed the primal version of a linear programming problem. But just as in input-output analysis there is a price equation corresponding to every quantity equation, so the same is true in linear programming. Thus corresponding to the primal version there is a dual version which can be written as

$$\text{Minimize } \omega^* = \mathbf{b}'\mathbf{p} \qquad \text{(VII.39)}$$

subject to

$$A'\mathbf{p} \geqslant \mathbf{c} \qquad \text{(VII.40)}$$

and

$$\mathbf{p} \geqslant 0 \qquad \text{(VII.41)}$$

where the elements of the vector $\mathbf{p}$ are usually termed imputed values or shadow prices.

7.65. Another optimizing model of great interest in the general area of education and economics has been put forward in Bénard (21, 22) and Bénard and others (23).

2. An application of the maximum principle

7.66. In many countries compulsory education ends around the age of 15 and retirement begins around the age of 65. This leaves a span of fifty years which can be devoted in part to learning and in part to earning, and the question is: how should this time be allocated between these two activities? The conventional answer so far has been that, as far as formal education is concerned, learning should be concentrated in the first few years; that in the great majority of cases it would only occupy two or three years, say up to the age of 17 or 18; and that only rarely would it extend beyond the age of 25, becoming more and more specialized as it was prolonged.

7.67. This answer implies that technical knowledge and the techniques it engenders change very little, so that knowledge gained in youth will remain useful over a normal working life without much further intellectual effort. This condition is not satisfied in a period like the present, when scientific and technical knowledge is constantly growing. If an individual's capacity to earn depends on his technical ability as judged by the changing standards of the times through which he lives, then he will find it worthwhile to forego some earnings in order to have the time for technical study; only thus can he maintain his earnings capacity. If his early training has emphasized ideas and methods of analysis rather than facts and techniques, he is likely to find it easier to acquire new knowledge later in life, because his view of the world will not be too constricted by his early learning.

7.68. The question of the optimal distribution of education over the life span has been studied in Weizsäcker (277) on a set of assumptions which, though extremely simple, bring out its principal features. The argument runs as follows.

7.69. In this simplified account there is only one kind of education and the level of skill is dependent on the time spent in it beyond the age of compulsory education. Attention is focussed on three factors. First, as time goes on, the education available may improve because of the accumulation of knowledge. Second, as time goes on, anything learnt in the past may depreciate partly through forgetfulness and partly through being superseded by later knowledge. Third, as times goes on, the present value of a given pay-off falls because of the rate of time preference.

7.70. Consider, first, the total labour force at time t, $L(t)$ say, measured in efficiency units. This can be expressed as the weighted sum of the human vintages which have left the educational system but have not yet retired. Working with continuous time we can write

$$L(t) = \int_{t-\theta}^{t} N(v, t)\, M(v, t)\, dv \qquad \text{(VII.42)}$$

In (VII.42), θ denotes the time span, assumed to be fixed, between the end of compulsory education and retirement: for example, the fifty years between the ages of fifteen and sixty-five. The symbol v relates to human vintages; an individual is of vintage v if he reaches the end of compulsory education at time v. The function $N(v, t)$ denotes the number of individuals of vintage v who are in the labour force at time t. The function $M(v, t)$ denotes the efficiency of an individual of vintage v at time t.

7.71. In principle there is no difficulty in evaluating $N(v, t)$; the evaluation of $M(v, t)$, however, is another matter. Here it is assumed that

$$M(v, t) = e^{gt} f[m(v, t)] \qquad \text{(VII.43)}$$

that is to say, the efficiency of vintage v at time t is the product of an exponential in t and a function f of the skill level, $m(v, t)$. The skill level is measured in years of training and, for simplicity, we might take $f(m)$ as a linear function of m. The exponential term expresses the assumption that a year of training in the past is today less important than a new year of training. Thus an individual's skill level is a weighted sum of his past years of training, where the weight of the last period is unity and the weight decreases exponentially as we move backwards in time. As time goes on, the weight of a given amount of training decreases exponentially at a rate h, say. This is due partly to the fact that what was learnt in the past becomes more and more obsolete and partly to the fact that in any case some of it is forgotten.

7.72. The span of years θ can be used either for further education or for earning. Let us denote by $p_v(t)$ the proportion of time used for learning, so that $1 - p_v(t)$ denotes the proportion of time used for earning. If we denote the derivative of a function with respect to time by the operator D, then

$$D\, m(v, t) = p_v(t) - h\, m(v, t) \qquad \text{(VII.44)}$$

which expresses the fact that the rate of change in the skill level is equal to the excess of education undertaken in a period over the depreciation in that period of education undertaken earlier.

7.73. On the assumption that the rate of pay of a period is proportional to the level of skill achieved, then the money income of period t can be expressed as

$$wf[m(v, t)]\, e^{gt}\, [1 - p_v(t)] \qquad \text{(VII.45)}$$

where w denotes a constant.

7.74. Consider, now, the stream of income which will accrue to a particular vintage over its span of active life and denote by Y_v the value of this stream discounted back to the present at a rate of discount, r. Then

$$Y_v = w \int_{v}^{v+\theta} e^{gt} f[m(v, t)]\, [1 - p_v(t)] e^{-r(t-v)}\, dt \qquad \text{(VII.46)}$$

which, since v is to be kept constant in what follows, can be rewritten as

$$Y_v = we^{rv} \int_{0}^{\theta} e^{(g-r)t} f[m(t)]\, [1 - p(t)]\, dt \qquad \text{(VII.47)}$$

on redefining t so that $t = 0$ corresponds to v.

7.75. In these terms our original problem can be expressed as follows:

$$\text{Maximize} \int_{0}^{\theta} e^{(g-r)t} f[m(t)]\, [1 - p(t)]\, dt \qquad \text{(VII.48)}$$

subject to the constraints

$$m(0) = 0 \qquad \text{(VII.49)}$$

$$D\, m(t) = p(t) - hm(t) \qquad \text{(VII.50)}$$

$$0 \leqslant p(t) \leqslant 1 \qquad \text{(VII.51)}$$

7.76. This problem can be solved by an application of Pontryagin's maximum principle, see Pontryagin and others (167), and, when this is done, it can be seen that there are three cases depending on the characteristics of $m(t)$.

7.77. In the first case, $m(t) = 0$ for all t; in this case there is no economic advantage in any further education. In the second case, $m(t)$ has a unique maximum, say at $t = t_0$; in this case the period from zero to t_0 is spent wholly in further education and the period from t_0 to θ, the remainder of the active span, is spent wholly in earning. Finally, $m(t)$ has more than one maximum: in this case the period from zero to t_0, say, is spent wholly in further education; in the period from t_0 to t_1, say, part of each time interval is devoted to further education and the remainder is spent in earning; and the period from t_1 to θ is spent wholly in earning. It appears that the third case is, in general, the most realistic. From this, Weizsäcker draws the conclusion that since the amount of further education of people already in the labour force is not at present very large there would seem to be scope for modifying existing arrangements in the direction of extending them into the period t_0 to t_1 on a part-time basis.

G. Concluding remarks

7.78. The range of models described in this chapter illustrates some of the uses to which the data proposed in this report can be put. Although the illustrations that have been given relate mainly to education, it is clear that formally similar problems arise in all branches of the social system so that the models are not tied to any particular branch.

7.79. It will be seen that the models are based on very different assumptions and that, for instance, the manpower requirements model and the multi-stage linear programming model of educational planning imply very different views of the world, as has been brought out very clearly in Blaug (30, pp. 214 *et seq.*). Not surprisingly, these two views, when systematically applied, typically lead to different conclusions. There is therefore a great need to compare the results of different approaches in various practical situations; to show, if it can be shown, that one is superior; and, if this is impossible, to work out how they can be combined to yield the greatest practical utility. The qualification is important as these models are difficult to apply and intellectual endeavours to take part in practical processes like planning must be done carefully so as not to be discredited by events. As Blaug said in a somewhat similar context in the passage just mentioned: "there is no reason to be apologetic about the fact that in most cases all we can safely recommend is movement in a particular direction for a limited period of time."

VIII. TIME BUDGETS AND MODELS OF THE ALLOCATION OF TIME

A. The allocation of time

8.1. In analysing, as in the preceding chapter, the passage of individuals through different sequences of life, it is often assumed that individuals can be adequately described in terms of their attachment to a particular category or state: an individual is learning, earning or inactive, is well or ill and so on. A systematic method of accounting for the use of time is the collection of statements usually referred to as time budgets.

B. The technique of time budgets

8.2. The period covered by time budgets is usually the 24 hours of the day or the 168 hours of the week. Given a list of uses of time, or activities, the principal aim of the research is to find out how much of the whole period covered was used for each activity. If the results for specific periods are to be generalized, it must be recognized that the way in which time is used varies not only between different groups in the community but also seasonally and between different kinds of day such as workdays, weekends and other holidays.

8.3. The assignment of time to activities gives rise to a number of problems. Do we, for instance, want a detailed or an aggregated list of activities; should we try to allocate parcels of time, however short, to activities or should we restrict attention to the principal activity in each finite interval, say each five minutes of the day; how far is it important to recognize that people can in some circumstances do several things at once, so that secondary and tertiary activities make their appearance; must we not, as has already been suggested in section J of chapter II above, pay attention to norms and motives?

8.4. The picture we obtain of the use of time and the seeming clarity of this picture depend very much on the way in which we answer these questions. The answers we give are likely to depend in part on the purpose of the survey. Choosing and scheduling television programmes, planning the facilities to be provided for students and trying to find out in a general way how people spend their time call for somewhat different answers to many such questions.

8.5. The collection of time budgets shares many of the difficulties of collecting economic budget data from households. Should the information be collected by interview or through a questionnaire to be filled in by household members on their own; should the information be collected for a single, specified day or should a number of consecutive days be averaged; how far is the allocation of time itself influenced by keeping records about the allocation of time; is there more variability in the use of time in some sections of the community than in others? All such questions deserve consideration and can only be answered in the light of experience.

C. Descriptive uses of data from time budgets

8.6. Let us now consider some of the descriptive uses to which time budgets can be put.

8.7. First, we can find out how much time is spent on different activities in the course of a representative day by different groups in the community.

8.8. Second, we can find out the distribution over the day of time used for different purposes.

8.9. Third, we can find out the extent to which a given use recurs during the day and the distribution of the duration of different uses.

8.10. Fourth, if comparable budgets are available for two dates, we can find out which uses have gained time and which have lost it over the interval. This can only be done on a net basis since the uses of time are not pairwise connected, so that additional time spent on one specific use cannot be said to have come from time saved on another specific use. Furthermore, times gained and lost over one interval can at most suggest a tendency and cannot be expected to continue with unchanged strength.

8.11. As an example of what has just been said, let us retabulate the data in table 3.5 above so as to bring out the main gains and losses of time over the interval 1924-59. This is done in table 8.1 below for the five main categories into which the use of time is divided.

8.12. The diagonal elements in table 8.1 indicate the time spent in different categories at the date when this was least and the gains and losses are entered in the penultimate column and the penultimate row respectively.

D. Models of the allocation of time

8.13. In the remainder of this chapter two methods of modelling the allocation of time will be described. The first, proposed in Becker (19), is essentially an extension of the economic theory of consumers' behaviour based on the recognition that different forms of consumption take time and that consumers' satisfaction is obtained from combinations of commodities and time rather than from commodities alone. The second, proposed in Tomlinson and others (218), is a type of entropy model and has shown itself to be useful in predicting the reallocations of time consequent on changes in the conditions under which students live and work.

E. Commodities and time

8.14. The model proposed in Becker (19) makes it possible to place households inside the production boundary and to integrate at least some aspects of time into the economic and social accounts. In conventional economic theory, production and consumption are institutionally separated: production takes place in firms and consumption takes place in households. The consumer's utility function is expressed in terms of the products of firms and the consumer attempts to maximize this function, subject to the price structure and the amount of income available to him, by buying (and consuming) the basket of goods and services he prefers. Becker's

Table 8.1. Gains and losses over the period 1924-59 in the average allocation of time on working days by urban workers in the Soviet Union

(Hours)

		1	2	3	4	5	Gains	Alloc^{n} in 1959
(a) Men								
1	Eating, sleeping etc.	8.66						8.66
2	Housework		1.70					1.70
3	Productive work			7.95				7.95
4	Travelling to work, shopping etc.				1.17		1.13	2.30
5	Study, recreation etc.					3.39		3.39
	Losses	0.63	0.02	0.33		0.15		
	Allocation in 1924	9.29	1.72	8.28	1.17	3.54		24
(b) Women								
		1	2	3	4	5	Gains	Alloc^{n} in 1959
1	Eating, sleeping etc.	7.90						7.90
2	Housework		3.91					3.91
3	Productive work			7.82				7.82
4	Travelling to work, shopping etc.				1.06		0.89	1.95
5	Study, recreation etc.					1.83	0.59	2.42
	Losses	0.20	0.89	0.39				
	Allocation in 1924	8.10	4.80	8.21	1.06	1.83		24

extension of this theory consists in recognizing that the goods and services that are capable of giving satisfaction to consumers require time to be spent in the household either in processing the products of firms or in actually enjoying this final product. In order to represent this, products and time are combined by means of household production functions.

8.15. As a result, the consumer is faced with two constraints rather than one: the money he can spend on products is limited by his income; and the time he can spend either on earning income or on consumption is limited by the twenty-four hours of the day. The situation envisaged is similar to that which arises under points rationing in which the consumer has to operate under a régime of two currencies, money and points. In Becker's model the two constraints can be combined and this is equivalent to the special case of the rationing model in which points can be converted into money and sold.

8.16. In setting up his unified constraint, Becker makes use of a concept which he terms full income that is the income that would be obtained if all time and other resources available to a household were devoted to maximising income without any regard to consumption. This would not of course mean working a twenty-four hour day since some sleep, food and even leisure are needed if income is to be maximised. In practice, most people have some regard for consumption and are willing to give up income in order to obtain something they like better: this may be time in which to play the piano or entertain their friends or it may be occupying themselves in a more pleasant but worse-paying job. Time can be converted into goods that increase satisfaction and the cost of this additional satisfaction is measured by the income foregone.

F. Allocation and entropy

8.17. The model described in Tomlinson and others (218) and, in more generally accessible form in Tomlinson and others (219), is quite different from Becker's model and is designed to test the effect of alternative planning and administrative policies on activity patterns and the use of facilities. The particular field to which it has been applied is the daily life of university students.

8.18. By collecting survey diaries, that is time-budget data recorded in diary form, from the students at a university, we can discover what each individual is doing at each time of day. For most purposes such a detailed description of student activities is unnecessary; what is wanted is an aggregate description of the allocation of students over activities at different times. If we can model this situation satisfactorily, we can use the model to predict the consequences of a change in the conditions under which the students live and work.

8.19. The theoretical basis for such a model can be derived by analogy with statistical mechanics as in Wilson (284). Data from the diaries provide what is there termed a microstate description of the system; that is, one in which the activity on which each individual is engaged at each time of day is recorded. From this, what is termed a macrostate description of the first kind can be derived by leaving out all information

relating to individuals and concentrating only on the numbers in each activity at each time of day.

1. Microstates and macrostates

8.20. In what follows the elements in the equations are all scalars but they are denoted by different symbols such as ν, n_j and N_{rj}. In this sequence, ν denotes the number of students; n_j denotes the jth element of a vector $\mathbf{n}$, that is the number of students engaged in activity j; and N_{rj} denotes the element in row r and column j of a matrix N, that is the number of students engaged during time interval r in activity j.

8.21. Suppose, to begin with, that there are ν students and μ activities. If all students are equally likely to engage in an activity then there are μ^ν equally likely microstates. If π^* denotes the probability of occurrence of one of these microstates, then

$$\begin{aligned} \pi^* &= 1/\mu^\nu \\ &= \pi^\nu \end{aligned} \qquad \text{(VIII.1)}$$

say. If π^{**} denotes the probability of occurrence of a particular macrostate, then

$$\pi^{**} = \frac{\nu!}{\mu^\nu \prod_{j=1}^{\mu} n_j!} \qquad \text{(VIII.2)}$$

8.22. Evidently, different macrostates occur with different probabilities. For instance, if $\mu = 3$ and $\nu = 4$, the probability that all four students will be engaged in the first activity is

$$\frac{4!}{3^4.4! \;.\; 0! \;.\; 0!} = 1/81 \qquad \text{(VIII.3)}$$

where, by definition, $0! = 1$. However, with the same values of μ and ν, the probability that two students will be engaged in the first activity and one in each of the second and third activities is

$$\frac{4!}{3^4.2! \;.\; 1! \;.\; 1!} = 12/81 \qquad \text{(VIII.4)}$$

8.23. If the probability that a student engages in activity j varies with j, then (VIII.1) is replaced by

$$\pi^* = \prod_{j=1}^{\mu} p_j^{n_j} \qquad \text{(VIII.5)}$$

and (VIII.2) is replaced by

$$\begin{aligned} \pi^{**} &= \frac{\nu!}{\prod_{j=1}^{\mu} n_j!} \cdot \prod_{j=1}^{\mu} p_j^{n_j} \\ &= \nu! \prod_{j=1}^{\mu} (p_j^{n_j}/n_j!) \end{aligned} \qquad \text{(VIII.6)}$$

which will be recognized as the general form of the multinomial distribution.

2. Activities and times of day

8.24. So far the model has been developed in terms of activities only but it can be generalized, without changing its form, so as to relate to the times of day at which different activities are undertaken and also to the locations at which they are undertaken. In order to recognize explicitly the time of day, let us introduce the following notation.

N_{rj} denotes the number of students engaged during time period r in activity j. The day is divided into τ unit periods of duration θ.

P_{rj} denotes the prior probability of being engaged during period r in activity j, that is the probability expected in the absence of interaction with other activities.

t_j denotes the total time to be spent in activity j in the course of a day.

8.25. Corresponding to (VIII.6) we now have

$$\pi^{**} = \nu! \prod_{r=1}^{\tau} \prod_{j=1}^{\mu} (P_{rj}^{N_{rj}}/N_{rj}!) \qquad \text{(VIII.7)}$$

3. Constraints

8.26. Since we are only interested in the macrostate representations, we can concentrate on finding the most probable macrostate which satisfies the constraints of the system. These constraints are of several kinds.

8.27. First, there is the population constraint

$$\sum_j N_{rj} = n_r = \nu \qquad \text{(VIII.8)}$$

This states that in every time interval throughout the day everyone in the system must be engaged in one activity or another.

8.28. Second, there is the time-budget constraint

$$\sum_r \theta N_{rj} = t_j \qquad \text{(VIII.9)}$$

This states that so much time must be allocated to each activity in the course of the day.

8.29. Third, there are a number of constraints that arise from a variety of practical considerations. For instance: if a cinema performance continues over several unit time intervals any individual who starts this activity will be likely to remain in the activity through a number of consecutive intervals; eating facilities are only likely to be available at certain times, and so that activity cannot be undertaken at other times.

8.30. This third kind of constraint affects the definition of the P_{rj}. In Tomlinson and others (219), P_{rj} was initially assumed to be inversely proportional to the number of periods in which that activity could be engaged in. This produced distributions of activities over time in which the proportion of students engaged rose sharply as soon as the activity could be engaged in and the numbers tended to remain constant until some change occurred in the availability of other activities. This result did not correspond with the time profiles observed in the time budgets and so the P_{rj} were redefined: the probability of starting an activity was assumed to be proportional to the number of sessions of the activity and inversely proportional to the number of time periods available for starting. As a consequence of this redefinition the time profiles of activities tended to show a stepwise increase in the proportion of students engaging in them, in accordance with observations.

4. The entropy model

8.31. This model can be expressed in the form: maximize (VIII.7) subject to (VIII.8), (VIII.9) and

any further constraints arising from considerations of the kind set out in paragraph 8.29. It is shown in Tomlinson and others (219) that this can generally be done under realistic combinations of constraints and that the *rj*th element in the most probable macrostate is

$$N_{rj} = P_{rj}\, t_j/\sigma \qquad \text{(VIII.10)}$$

where σ denotes a normalizing factor which ensures that the time budget and population constraints are met.

8.32. The term entropy model is used because entropy can be regarded as lack of information. The most probable macrostate is the one which corresponds to the largest number of microstates and so contains the least information about them.

5. Extensions, uses, limitations

8.33. As has been said, the entropy model can be extended to cover location as well as time of day and activity. In doing this, a relationship is needed between the amount of travel and the distance or time or cost involved. A convenient assumption which, in Tomlinson and others (219) at least, gave good results is that the amount of travel is related to the time involved by an exponential decay curve.

8.34. The model can be used to work out the probable responses to changes in the conditions of living and working. For instance the university authorities may be wondering whether to extend canteen facilities on the campus from 18.15 hours to 20.00 hours. Were they to do this, the time and location profiles of many activities would be likely to change. In coming to a decision, the authorities might find it useful to work out the probable nature of these changes.

8.35. Changes may take place in the environment of the university which the authorities cannot control but to which they ought, possibly, to respond. For instance, a new bus schedule between the campus and the neighbouring town or a re-siting of shops and restaurants in the neighbourhood of the campus are likely to affect not only the students but also the use of the facilities provided by the university authorities.

8.36. The constraints employed by the model are fixed though they may be different from those appropriate when the time budgets were collected. As can be seen from Tomlinson and others (219), very interesting results can be obtained on this basis; but for some purposes it may be desirable to introduce inequality constraints. As it stands, the model is designed to ensure a certain daily allocation of time. However, all activities are unlikely to be equally important to the students and, if circumstances change, they might prefer to devote a little less time to one activity in order to be able to devote a little more time to another. While some information can be gained from observing which constraints are binding, an attempt to allow for this kind of consideration would require the formulation of an objective function as in programming models.

Part Two. Individual Sequences and Subsystems

IX. THE CONTENT OF PART TWO

A. Individual sequences and subsystems

9.1. In this part of the report we shall turn away from the general issues discussed in part One and look at the problems of individual sequences and subsystems. Each chapter is devoted to one of these and the aim, in every case, is to arrive at a set of recommended data series to be collected and a number of social indicators, based on these data series, which attempt to summarize some aspect of the social system.

9.2. The arrangement of this part can be compared with the outline of the scope and coverage of the system given in chapter II of part One. It will be found that there is a good deal of common ground but not a complete correspondence. In chapter II, the object was to set out a number of problem areas that ought to be considered in setting up a system of social and demographic statistics. Here the object is to elaborate the social and demographic data which can be recommended now for collection in respect of the different parts of the system as a whole. Thus, as was stated in section E of chapter II, few recommendations are made here in respect of information relating to the natural environment, it being understood that this whole subject will be treated in detail in a separate exercise; and a number of topics raised in chapter II, such as the measurement of the net advantages of an occupation or of the economies and diseconomies of city size, are not pursued here, on the grounds that generally accepted methods of carrying out such measurements are not at present available. In other words, this part concentrates on what we can reasonably hope to do now in contrast with what it would be desirable to do in the long run.

9.3. The arrangement of this part is as follows.

9.4. The next four chapters, X through XIII, are concerned with the demographic, social and economic characteristics of individuals, families and households. Chapter X deals with the size and structure of the population, births, deaths and migration and is concerned with general demographic information about individuals. Chapter XI takes up the question of family formation and discusses the definition of families and households and their demographic characteristics. The subject of classification into social groups is discussed in chapter XII, which deals with social class, stratification and mobility. And the subject of classification into economic groups is discussed in chapter XIII, which deals with the distribution of income, consumption, accumulation and net worth.

9.5. The three chapters which follow, XIV through XVI, are devoted to three topics which are quite dissimilar from one another but have the common characteristic of being highly relevant to the welfare of individuals and their families. Chapter XIV deals with housing and its environment; chapter XV with the allocation of time and the use of leisure; and chapter XVI with social security and welfare services.

9.6. The final four chapters of this part, XVII through XX, are concerned with four important aspects of human development over the life cycle and provide examples of what have been called sequences or parts of them. Chapter XVII deals with learning activities and educational services; and chapter XVIII with earning activities, employment services and the inactive. If the information relating to individuals contained in these two chapters is integrated we can form a statistical account of the active sequence, that is of the movements that take place from inactivity in infancy, through participation in learning and earning activities to inactivity again at the end of the life span. Chapter XIX deals with health and health services; and chapter XX with public order and safety, offenders and their victims.

B. The structure of the chapters

9.7. The text of the chapters is intended to lead up to the tables containing the recommended series, classifications (characteristic and other) and social indicators. As far as possible, their contents are arranged on a common pattern as follows.

9.8. In the first place, there is a discussion of the problems of delimiting the area of information relevant to the chapter and, where possible, an attempt is made to define this area.

9.9. In the second place, the main topics, into which the recommended series and social indicators are grouped in the tables, are set out and discussed.

9.10. In the third place, the characteristic classifications relevant to the chapter are described. These are not, of course, the only classifications which appear in the tables since, in an interdependent system, other classifications are often needed. These are described in connection with the sequence or subsystem of which they are characteristic.

9.11. Some of the classifications make their appearance wherever they are applicable, and so the dichotomy "characteristic" and "other" might have been replaced by a trichotomy "common", "characteristic" and "other". Partly to emphasize the characteristic classifications and partly in an endeavour to keep the tables as simple as possible, the categories "common" and "other" are not distinguished in them. The common classifications are as follows: for demographic and social variables, age, sex, geographical area, urban and rural area, size and type of household, socio-economic class and national or ethnic origin; and, for economic variables, institutional sector, size, kind of activity, purpose and object (goods and services).

9.12. Finally, the recommended series and social indicators are tabulated and briefly described. Although, at present, data are collected in most countries for a variety of dates and intervals, it is desirable for the purpose of making connexions to work towards a standard enumeration date and a standard interval.

These might be the first of January and the calendar year; the advantages and disadvantages are discussed in section C of the following chapter.

C. The recommended series and social indicators

9.13. The recommended series are data series. They can be converted into rates or percentages, or otherwise subjected to simple manipulations, but these obvious possibilities are not specifically mentioned except where a particular manipulation, such as the calculation of the growth rate from a time-series of population numbers, is selected as a social indicator. Likewise, the data series can be disaggregated in terms of the classifications, characteristic or other, shown in the tables. But recommendations are rarely made on this point, since what is desirable must vary with the particular problems of different countries and what is practicable must depend on the data available at any particular time.

9.14. The social indicators are described in somewhat more detail than the data series. A limited number of indicators is suggested for each of the main topics in a chapter and an attempt is made to describe what these indicators show and why they would be useful. They range from simple rates and proportions to more elaborate constructions based on index-numbers, life tables and so on.

9.15. The data series recommended in the tables make it possible to build up human stock-flow matrices and to derive from them coefficients, such as the transition and admission proportions described in chapter VII above. This possibility is not referred to in the tables but some of the social indicators presuppose that it has been acted on.

X. THE SIZE AND STRUCTURE OF THE POPULATION, BIRTHS, DEATHS AND MIGRATION

A. Introduction

10.1 This chapter is concerned with: first, the size of the population and its composition in terms of age, sex and region; second, internal factors which result in a change in its size, namely births and deaths; and, third, migration which, in the case of external migration, changes its size and, in the case of internal migration, changes its regional distribution. An interesting collection of papers on mathematical demography with special reference to multi-regional analysis and migration is given in Wilson (285).

10.2. As was explained in the preceding chapter, information relating to the number, size and composition of households and families and to their formation and dissolution, including information on such topics as marriage, divorce and widowhood, will be found in chapter XI which is concerned with family groupings.

B. Population boundaries

10.3. In censuses of population the question of who is to be included is usually dealt with in terms of normal residence (the *de jure* concept) and actual residence on the date of the census (the *de facto* concept). This distinction is similar to that between national and domestic concepts in the national economic accounts. Normal residents are essentially people who regard the country (or district) as their home country (or district); whereas actual residents are people who are present in the country (or district) at a particular date.

10.4 The distinction is important in terms both of statistical comparability and of the kind of analysis we wish to make. As an example of the former, birth and death registrations in Britain are based on the *de jure* concept and so it is desirable to have census data on this basis although the census is kept primarily on a *de facto* basis. As an example of the latter, if we are interested in the educational development of our country's students we shall be concerned with the flow of these students both through our universities and those of foreign countries: this is the national concept. If, on the other hand, we are interested in the administrative problems of our country's universities, we shall be concerned with the flow of students, whether domestic or foreign, through our universities: this is the domestic concept.

10.5. In a census, the population is usually recorded on one basis or the other. In making population estimates at other times, allowance must be made not only for births and deaths but also for inward and outward population movements. In doing this it is convenient to make a distinction between migrants and visitors. Migrants are individuals whose displacement is intended to be more or less permanent and who, therefore, become normal residents of the country into which they move. Visitors, on the other hand, are individuals whose displacement is intended to be temporary and who remain, therefore, normal residents of the country from which they are temporarily absent. Thus immigrants add to and emigrants reduce the *de jure* as well as the *de facto* population; whereas inward visitors add only to the *de facto* population and visits abroad by normal residents reduce only the *de facto* population. In other words if population estimates are kept on a *de jure* basis visitors can be wholly ignored whereas if they are kept on a *de facto* basis visitors cannot, in principle, be ignored though, in practice, their numbers may be small at any particular date.

10.6. The above definitions make use of the criterion of intention, and it must be recognized that visitors may end by becoming migrants and that migrants may change their minds and go back to their country of origin, or migrate elsewhere, after a short time. It is also true that some people, such as business representatives abroad, have strong ties with more than one country. Finally, there are various types of migrant labour whose country of residence for the time being is dictated by the state of the labour market. These workers may eventually settle down in a country other than their own but, until they do, they are perhaps best regarded as visitors.

10.7. In attempting to deal with these borderline cases in the economic accounts, the SNA (255, p. 236) defines resident households and individuals so as to exclude foreign visitors in the country for less than a year. Exceptions are made in respect of foreign diplomatic personnel and members of foreign armed forces who, independently of their length of stay, are treated as normal residents of their home country. Whatever detailed solution is adopted it is to be expected that migrants will constitute a relatively small category and visitors a relatively large one. At the same time, since tourist visits are usually of short duration, the number of visitors recorded at most times of the year is likely to be comparatively small.

C. Time intervals and starting dates

10.8. As we have seen, demographic matrices and accounts link the opening stock of population at the beginning of a period (the survivors from the preceding period) with the closing stock at the end of the period (the survivors into the following period). As with economic accounts, the time interval will normally be a year, although in principle there is no difficulty in setting up accounts for shorter or longer periods.

10.9. If the year is accepted as the time interval, there remains the question of the starting date. If 1 January is chosen, the stocks will relate to the beginning and end of calendar years and the flows will be those into and out of calendar years. Since the national economic accounts are usually kept for calendar years there might be some advantage in making 1 July the starting point for the demographic accounts, since this would auto-

matically provide mid-year estimates of demographic variables relating to stocks. From an educational point of view, on the other hand, a case could be made for a year beginning on 1 October (or, in the southern hemisphere, 1 April) say, since this would provide information on the distribution of students at the beginning of the academic year. If we restrict ourselves to annual accounts some compromise is inevitable and, all things considered, the calendar year is perhaps the most convenient time period.

10.10. The choice of time interval affects the treatment that it is reasonable to apply to the recording of visitors, the vast majority of whom, largely composed of tourists, have an average stay in a foreign country of probably about a fortnight. Most of these would be excluded from annual accounts; only those visitors who happened to be present at the beginning or at the end of the period would be recorded. Indeed, for many purposes the omission of repeated inward and outward movements of short duration is essential in order to avoid duplication, as the following example shows.

10.11. Border workers, who live in one country and work in another, move almost daily between the two countries. They are normal residents of the country in which they live and form part of the domestic labour force of the country in which they work. If the accounts are kept on a domestic basis for the country in which they work, these workers will appear both as an inward and as an outward movement associated with the industry in which they work. And the labour force of that industry, calculated as the sum of normal residents and border workers, will be correctly estimated only if border workers who work throughout the year are shown as making a single inward and outward movement. Of course, if the accounts were kept by days rather than by years every inward and outward journey would appear automatically. This is a good illustration of how the movements to be recorded are dependent on the time interval for which the accounts are kept.

10.12. We can see from this discussion that the recording of short-term movements in a system of demographic matrices implies the adoption of a short time interval. It would seem best, therefore, to establish the regular system of demographic records on an annual basis and keep more frequent records of the movements of visitors which would tie in with the regular system at the beginning and end of the year. Such records would clearly be needed in connection with the provision of travel, hotel and restaurant facilities and the like.

D. Births

10.13. The regular reporting of births is needed in making population estimates for years not covered by a census or other bench-mark source. It is necessary to distinguish live births from still births and it is usual to divide the former category between legitimate and illegitimate births.

10.14. In making population projections, information is needed on the factors affecting fertility such as the age of the mother, her marital status and her parity, that is to say the number of children already born to her. The combination of these three factors implies a detailed classification of births and it is necessary to consider how the number of categories can be reduced without a significant sacrifice of information; for instance, is it sufficient to group the mother's age in five-year age groups or to assume that the deterrent effect of children already born is not operative before the third or fourth child? In certain circumstances it might be desirable to introduce a more symmetrical treatment of men and women, recognizing that there may be a significant imbalance in the sex ratio at the relevant ages.

10.15. In addition to the factors just considered, there are other influences on birth rates which may change substantially but which are not very easy to measure. One is the average size of family which at different times and places is commonly aimed at; and another is the acceptance or rejection of the idea of family planning and the willingness and ability to adopt contraceptive measures, abortion or other means to this end. Changes in factors such as these may well outweigh the effect of purely demographic influences so that insight into future population movements may require that precise studies based on demographic history be supplemented by studies in human attitudes and ecology, speculative as these are almost certain to be.

E. Deaths

10.16. As in the case of births, the regular reporting of deaths is necessary in making population estimates and projections. Furthermore, in all the subsystems allowance must be made for the fact that death rates vary between states and over time, but it is convenient to concentrate the discussion of this question here. Information about death rates is usually readily available by age and sex but not by most other categories. Population censuses sometimes provide estimates of death rates by broad social classes obtained by relating an occupational classification of deaths over the three years around the census to the occupational data in the census itself. This method is not as reliable as might be supposed because the question relating to occupation in death registrations is frequently not answered very precisely. In developing the present system, more complete and more accurate information is needed. This might be obtained either by improving the scope and reliability of death registrations or by recording information about death (and emigration) along with other information about flows in the various subsystems. The second of these methods is probably to be preferred since the data collected for a subsystem would then be complete in itself and since the circumstances of death registration are probably not conducive to obtaining detailed, accurate information.

10.17. In most parts of the world, death rates tend to fall through time but not steadily and not uniformly in different age groups. The projection of death rates raises problems similar to those encountered in projecting input-output coefficients. To a large extent the outcome depends on advances in medical science and its applications, but account must also be taken of other factors such as occupational shifts, the growth of motor transport, the improvement of the road system and so on.

10.18. In interpreting time series of deaths ascribed to various diseases several factors must be borne in mind. In the first place, improvement in medical diagnosis may alter, and in general make more precise, the attribution of death to specific diseases. In the second place, as applied medical science reduces the lethal effect of certain diseases, the result can only be that, in part, people live longer and, in part, their death is ascribed to one of the diseases that has not so far been cleared up. Thus it might be useful to consider a domi-

nant group of diseases, gradually reducing in number as time goes on, from which almost everyone who does not meet with a fatal accident must die. The fact that the death rate from these diseases rises through time does not necessarily indicate that they are becoming more virulent but simply that they are the residuary legatee of the successes of applied medical science.

F. Migration

10.19. There are two main kinds of migrant: political refugees and those who seek to improve their economic position. A proper treatment of migration thus involves the introduction of political and economic factors and is further complicated by changing national policies with respect to the inward movement of foreigners and the outward movement of nationals. For these reasons it is particularly difficult to treat migratory flows as endogenous variables in a socio-demographic model, though it may be useful to calculate the outcome of the persistence of present tendencies.

10.20. International migration is more affected by political and regulatory factors than is interregional migration within a single country. It also gives rise to greater problems of assimilation and to the development of ethnic and religious minorities that cannot readily be integrated into the community of their adopted country. Antagonism is likely to develop against migrant groups which are different in appearance, habits and attitudes from the local inhabitants and to grow in areas where migrants are relatively numerous.

1. International migration

10.21. Even if we are a long way from a complete theory of migratory movements, it would be useful to have much more complete and detailed information on international migration than is generally available. There is a strong contrast between the meticulous requirements for naturalization imposed in many countries and the lack of even the simplest data about immigrants. Sometimes even the number of immigrants is only a rough estimate and no regular information is available even about age and sex, to say nothing of other characteristics. At the same time there may be detailed records of the school attendance of children recorded as immigrants. In this connexion, care is needed to avoid purely legalistic distinctions such as that between the children born to immigrants before and after their migration. It must be recognized that while migration takes place at a point in time, it creates a situation which persists until the migrant or his descendants are in some sense integrated into the community. This may or may not happen quickly.

10.22. International migration gives rise to a number of problems which as far as possible should be catered for in an integrated system of statistics. Three examples will be given below.

(a) *Differential fertility and mortality*

10.23. Immigrant groups may come from countries in which the age-specific birth and death rates are very different from those of the country to which they migrate. If these rates remained unchanged after migration, the relative size of the descendants of the immigrant group might be quite different from that of the immigrant group itself. It is likely that birth and death rates will change after migration and it would be useful to know to what extent the rates for immigrants tend to approach those of the local population.

(b) *The regional concentration of immigrants*

10.24. Powerful social and economic forces tend to ensure that immigrants who differ markedly from the local population in appearance, habits and attitudes come to be concentrated in particular localities thus giving rise to possibly avoidable social tensions. The mechanism and consequences of these concentrations require further study in the interests both of the immigrants and of the local population.

(c) *The international circulation of talent*

10.25. This topic refers to the migration of highly qualified practitioners, mainly in science, technology and medicine, and is more usually referred to as the brain drain. Strong objection is often expressed against individuals who, having absorbed a large educational input from the country of their birth, devote their productive output to the service of another country in which pay and conditions are better. It is less generally remarked that countries that suffer from this phenomenon vis-à-vis their richer neighbours frequently gain from it vis-à-vis their poorer neighbours. This is an area in which the interests of individuals and communities may well appear to conflict, and more information is needed both on the motives for these movements, which are often described in the crudest economic terms, and the characteristics of individuals who are prepared to uproot themselves and can successfully attach themselves to another community.

2. Internal migration

10.26. Population movements within a country can be looked at from two points of view: movements from one self-contained region to another; and movements between areas of different population density, as in the study of French internal migration in Tugault (221). It is not uncommon to observe both movements to more prosperous regions, for instance from the north to the south of Britain or from the south to the north of Italy, and at the same time a movement from the countryside to the towns. These movements often give rise to serious problems; for instance, as more and more people try to live in London it becomes necessary to pump out some of the surplus population into neighbouring regions, such as East Anglia, of lower population density. As a consequence not only must more housing, drainage and other services be provided in these regions but additional jobs must be found too. This brings about a change in the economic structure of the regions which in turn leads to other demands and, in particular, demands on the local system of schools and technical colleges which have to provide the longer training usually called for by urban forms of employment.

10.27. These problems add force to the demand for regional policies which seek to put all regions on a self-sustaining basis and so slow down, or even reverse, the former regional drifts. They also indicate the importance of studying the effects of population density, a matter referred to in section C of chapter II above. For instance, the need for various services as well as the cost of providing them are likely to vary with density so that sparsely settled areas and densely populated metropolitan centres are likely to involve more difficulty and expense than do regions of medium density.

G. Characteristic classifications

10.28. The main characteristic classifications relevant to this chapter are the very general ones of age, sex and region, to which may be added some special ones, such as the parity of the mother (along with her age and marital status) in the classification of births.

10.29. The classifications by age and sex call for little comment. Throughout this report, age is defined by year of birth. For many purposes it is sufficient to present data classified by age group rather than by individual years of age, and for this purpose five or ten year age groups, starting at age 0, are convenient. There is no reason why the same grouping should always be adopted throughout the whole age range but it is highly desirable that the classifications used in different subsystems should be conformable.

10.30. The classification by region, or geographical area, is needed in providing population estimates and projections for successively smaller and smaller administrative districts and other regional groupings. The largest areas might be the states of a federation or the standard regions into which Britain, for instance, is divided for statistical purposes; and these would then be further divided until the smallest areas of local administration were reached.

10.31. The parity of the mother is needed in connexion with the analysis of fertility, since the probability that a woman will give birth to a child at age θ is likely to be influenced by the number of children to which she has already given birth. The problem here is how best to group parities so as to reduce the number of categories without undue loss of information.

10.32. A number of classifications used in table 10.1 below are either of a very general nature or characteristic of some other subsystem. This is simply a reflection of the interdependent nature of the present system.

H. Recommended series

10.33. The items of data, classifications and social indicators suggested in respect of the demographic circumstances of the population are set out in table 10.1 below.

Table 10.1. The size and structure of the population, births, deaths and migration: items of data, classifications and social indicators

Items of data	*Characteristic classifications*	*Other classifications*	*Social indicators*
(a) Population stocks			
1. Number of human beings	Age, sex, geographical area	Urban or rural, area, national or ethnic origin, socio-economic class, marital status, size and type of nuclear family, size and type of household. Size and type of extended family may also be useful	Average annual race of growth Average age Dependency ratio Sex ratio
(b) Population flows			
1. Births	Age and parity of mother, sex of child, geographical area	as above	Crude birth rate General fertility rate Gross reproduction rate Net reproduction rate Still-births as proportion of total births Illegitimate births as proportion of all live births
i. Number of births			
ii. Number of live births			
2. Deaths	Age, sex, geographical area	as above	Crude death rate Standardized death rate Expectation of life at ages 0, 30 and 60
i. Number of deaths			
3. Migrants	Age, sex, geographical area	as above	Crude immigration rate Crude emigration rate Crude net external migration rate Crude internal migration rates
i. Number of immigrants from the rest of the world			
ii. Number of emigrants to the rest of the world			
iii. Number of internal migrants			

10.34. The series in table 10.1 are confined to individuals, comparable information relating to nuclear families and households being set out in chapter XI below.

10.35. As has been said, the items relate to observations or estimates which may need a considerable amount of compiling. Thus, for instance, it is recognized that it is often convenient to express distributions in percentages or flows as rates of various kinds, but these simple manipulations are not specifically mentioned. The classifications, which are divided between characteristic and other, are intended to draw attention to criteria which, if not in common use, would seem to be appropriate; but it is recognized that they may not all be practicable or necessary in every country.

10.36. The final column of table 10.1 contains a limited number of social indicators connected with each of the main topics dealt with in this chapter. Again, many of them could be classified in various ways but, in general, these ways are not specified since it would be difficult to do this in a manner appropriate to the conditions of different countries.

1. Indicators connected with population size and composition

10.37. The rate of growth of the population is best expressed as an average annual exponential rate for the past five or ten years. It is also useful to calculate it for single years, particularly where it is likely to be undergoing a long-term change.

10.38. The average age of the population is strongly associated, under normal conditions, with its rate of growth, higher rates of growth tending to accompany lower average ages.

10.39. The dependency ratio is usually defined as the population aged 0-14 plus the population aged 65+ divided by the population aged 15-64. This measure is intended to provide an indication of the numbers needing to be supported economically to the numbers available to support them and varies, according to Stone (202), from 0.47 to 1.25 over the world as a whole. It could be argued that the age ranges given above, while appropriate in a country where the expectation of life at birth is around 70 years, is less appropriate where this expectation is around 40 years since the span of economic activity is likely to be different in the two cases.

10.40. The sex ratio is perhaps most interesting if calculated over specific age ranges, for instance, the reproductive span, say 15 to 45, and old age, say 65+.

2. Indicators connected with births and fertility

10.41. The crude birth rate measures the ratio of live births to total population. It is not a satisfactory indicator of fertility because its numerator and denominator are only very loosely connected, their relationship being influenced in particular by the age composition of the population. It does, however, measure the gross rate of increase of the population by births and, moreover, it is a useful indicator for making comparisons since it is very generally available and in many countries has been calculated for a long time.

10.42. The general fertility rate measures the ratio of live births to the number of women in the reproductive span, say aged 15-44. A variant of this measure which, however, will typically lead to much higher figures, is the ratio of legitimate live births to the number of married women in the reproductive span. Either of these measures relates births to that part of the population which is capable of giving rise to them.

10.43. The gross reproduction rate is obtained by adding up the age-specific birth rates, usually in respect of female children, over the reproductive span. This sum provides a measure of the extent to which women would, on average, bear enough female children to replace themselves in the course of a lifetime, given a fixed set of age-specific birth rates.

10.44. The net reproduction rate makes allowance for the fact that some females die at each age between birth and the end of the reproductive span, with the consequence that the calculation just described overstates the average number of children born to a woman in the course of her life.

10.45. It will be noticed that the measures described in the preceding two paragraphs could be based on longitudinal rather than transversal data; that is to say it would be possible to follow to their completion the families of women born in (or, alternatively, married in) a particular year.

10.46. There is no reason to suppose that live births form an absolutely constant proportion of all births; for instance, in England and Wales, still-births have fallen from 4.1 per cent of all births in 1930-32 to 1.2 per cent in 1971.

10.47. The proportion of illegitimate to all live births provides an indicator of attitudes to childbearing and marriage. Another possible indicator is the percentage of legitimate live births to women married once only occurring within $\theta < 9$ months of marriage. Figures for Great Britain in respect of mothers in the youngest age ranges are given, with $\theta = 8$, by the United Kingdom Central Statistical Office (226, No. 3, p. 60).

3. Indicators connected with deaths and survival

10.48. The crude death rate measures the ratio of deaths to total population. It suffers from limitations as a measure of mortality corresponding to those mentioned in paragraph 10.41 above.

10.49. The standardized death rate is a weighted average of age-specific death rates, using the numbers in different ages (or age groups) of an appropriate standard population as weights. It is desirable to calculate separate indices for males and females even if a combined index is also given. Among age-specific death rates, the rate of infant mortality deserves special emphasis.

10.50. The expectation of life at age θ is the number of years that an individual aged θ can expect, on average, to live after that age. The expectation of life at birth, which it is desirable to calculate for males and females separately, is a convenient means of summarizing age-specific mortality experience. It is possible to calculate expectations at any age and it is suggested that ages 30 and 60 would, generally speaking, represent a convenient choice.

4. Indicators connected with migration

10.51. Crude external migration rates measure the ratio of inward, outward and net migration to total population and provide an indication of the quantitative importance of external migration.

10.52. Crude internal migration rates, similarly calculated for the major regions of a country, provide an indication of the extent and direction of geographical mobility in the existing population.

XI. FAMILY FORMATION, FAMILIES AND HOUSEHOLDS

A. Introduction

11.1. In the preceding chapter we concentrated on what might be called the demographic aspects of population statistics. Here we shall concentrate on the social aspects: the number, formation and dissolution of marriages, families and households; and the small minority of the population who live not in private households but in non-private establishments. Attention will be given to the problems that arise in recording the transitions of families or households as opposed to individuals.

11.2. As was the case in chapter X, a population may be recorded on a *de jure* or a *de facto* basis. This distinction is equally relevant here, and so nothing further need be added on the question of population boundaries.

11.3. The remainder of the chapter deals with characteristic classifications and with recommended series and social indicators.

B. Married couples, marriage and divorce

11.4. The great majority of families consist of married couples. Apart from migration, the number of such couples in any area can only be increased by a lawful marriage and can be diminished either by the death of one of the partners or by divorce or other form of annulment which is recognized as dissolving the marriage.

11.5. Information is needed on the number of married couples (with allowance for other groupings in countries which do not practice monogamy), the number of marriages and the number of dissolutions of marriage by divorce or by death.

C. Families

11.6. Not all families consist of married couples, with or without children, and some care is needed in defining the term. Let us begin with the following definition. A family consists, in the first place, of a married couple either alone or with their never-married offspring of any age; and, in the second place, of a lone parent with his or her never-married offspring of any age.

11.7. A lone parent is any single, widowed or divorced parent or a married parent whose spouse does not live in the same household.

11.8. An offspring may or may not be dependent and, in most cases, will be a son or daughter; but the term also includes a step-child or adopted child and remoter descendants, such as a grandchild without parents.

11.9. It will be seen that with these definitions the concept of family does not extend to the whole population. There are many cases of adults living alone or in groups not covered by the relationships here used in defining a family. Although this treatment is convenient for present purposes it must be recognized that there is a fairly common convention of regarding the never-married not living with parents as forming a family.

11.10. Information is needed about the number of families of different kinds, about their formation and dissolution and about the number of people living in them.

D. Households

11.11. Individuals, whether grouped into families or not, live in households. Most people live in private households but a small minority live in non-private establishments or institutional households.

11.12. A household is usually defined in terms of housekeeping arrangements. Thus, in the British population census, a household is defined as: any group of persons, whether related or not, who live together and benefit from a common housekeeping; or any person living alone who is responsible for providing his or her own meals.

11.13. It follows from what has been said that a household may contain no families, one family (the common case) or more than one family. In general, therefore, the number of households exceeds the number of families; and it is the number of households that is likely to be closely related to the number of dwellings.

11.14. Information is needed about the number of households of different kinds, about their formation and dissolution and about the number of people living in them.

11.15. Before going on to consider characteristic classifications it may be useful to illustrate numerically the relationship between married couples, families and households. This can be done for Great Britain in 1966 from the United Kingdom Central Statistical Office (226, No. 3, tables 8 and 9). All numbers in the following summary are expressed in thousands.

Married couples, no children	4647	
with children	8017	
Total married couples		12664
Lone parents, with children		1308
Total families		13972
No-family households	3287	
less Excess of families over households in multiple-family households	–322	
		2965
Total households		16937

11.16. This summary is drawn up on the basis of the definitions given above in which, it will have been noticed, there was no reference to dependent children. A dependent child can be defined as a person under 15 years of age or between 15 and 24 years of age provided he or she is an unmarried student. An alterna-

tive classification of married couples and families making use of the concept of dependent children appears, from the same source, as follows.

Married couples,		
without dependent children	6444	
with dependent children	6220	
Total married couples		12664
Lone parents,		
without dependent children	809	
with dependent children	499	
Total lone parents		1308
Total families		13972

E. Stock-flow matrices for individuals, families and households

11.17. In most of the chapters of this part of the report the stock-flow matrices relate to individuals. In this case there is, in principle, no difficulty since there is only one thing that can move from state to state, namely the individual himself. But this is not true of families or households since in their cases there are typically two or more things that can move, namely the family or household members. This leads to a new situation since, whereas the removal of an individual from one state leads to his appearance in another state, the removal of a family from one state does not necessarily lead to its appearance in another state because it may dissolve and be replaced, even if all its members stay alive, by any number of families from zero up. A similar statement can be made for households.

11.18. In this part of the system we may wish to classify individuals, families or households in terms of family and household characteristics. Let us look at each case in turn.

1. Individuals

11.19. If we classify individuals we shall obtain, as regards stocks, the numbers living in each category of family or household at a given date; and, as regards flows, the movements of individuals between family and household types over a given interval. From this information we could work out the present pattern of movement, the way in which this pattern is changing and the distribution of individuals over families or households which would eventually come about either if the present pattern of movement remained fixed or if it changed in some predictable way.

2. Families

11.20. If we classify families we must try to find, for the reason given in paragraph 11.17 above, some stable nucleus which, as long as it persists, can be identified with a family. The obvious stable nucleus is the married couple living together. As they have children, this nucleus moves from the state of married couple without children to the state of married couple with children, or with a given number of children, living with them. As the children grow up and leave the parental home, the nucleus moves back in terms of the number of children living in it and may eventually return to its initial state. If one of the married couple dies or is divorced this nucleus is dissolved and we have to see what new nucleus or nuclei, if any, take its place.

11.21. Evidently there are many possibilities which it would be tedious to enumerate but easy to illustrate. If one partner of a childless marriage dies, the family is dissolved but a new family will come into being if and when the surviving partner remarries. If a childless marriage is dissolved by divorce, the family is dissolved but two new families will take its place if and when both the original partners remarry. If a marriage with children is dissolved, the family is dissolved but 0, 1 or 2 families respectively will take its place in the following circumstances: the children are all grown up and none lives with either parent and neither parent remarries; some of the children live with one of the divorced parents and none with the other who does not remarry; some of the children live with each parent.

11.22. If the family consists of a lone parent with children, the family will dissolve when this state of affairs terminates. Thus if a family consists of a mother and son living together, it will dissolve if either of them dies or if either of them marries. If the son marries, a new family appears consisting of the son and his wife and it is immaterial whether the mother continues to live with them or not; and if the mother remarries a new family appears consisting of the mother and her new husband and it is immaterial whether the son continues to live with them or not.

11.23. Many other cases may arise. For instance, a surviving parent may go and live with his or her married offspring, in which case there is no change in the number of families. More rarely, an elderly married couple may go and live with one of their married children, in which case there is also no change in the number of families but two one-family households have been transformed into a two-family household. Similarly, if a son gets married and he and his wife live with his parents an extra family has been formed and a one-family household has been transformed into a two-family household.

11.24. From this discussion it would appear that there are in fact two stable nuclei, the married couple and the lone parent with child or children. But these two nuclei are arranged in a hierarchical order in which the first dominates over the second. In other words, if a lone parent with children remarries a family disappears and a new one takes its place.

3. Households

11.25. As long as we are concerned with households that contain families no problems arise that have not been discussed already. It is immaterial whether the families in a multi-family household are related or not and it is also immaterial whether or not a family contains an unrelated member: the *ménage à trois* presents no special problem. But a new question arises in connection with households none of whose members form a family: the no-family households as they were called above.

11.26. The question is: can we find a stable nucleus for such groupings? An extreme answer to this question would be that a no-family household dissolves on any change in its composition, but this would not be a very convenient solution since many of the households in question are continually changing their composition by the substitution of new members for members who leave them.

11.27. An alternative answer would be that a one-person household dissolves if it becomes a two-person

household, in other words two one-person households are transformed into a two-person household, and that a multi-person household persists unless its membership falls below two. This would mean that households consisting of students or young office workers or friends would persist until their membership fell below two.

11.28. The stable nucleus in this case would be any persisting group of two or more persons, not constituting a family, in which the members lived together in the circumstances defining a household.

F. Characteristic classifications

11.29. Of the eleven classifications set out below the first six are intended for use in connexion with married couples, marriage and divorce, families and private households, the last four are intended for use in connexion with non-private establishments or institutional households and the seventh is applicable to either group. Two important classifications, social class and income, are omitted here since they are discussed in detail in the following two chapters.

11.30. Classifications by the common criteria of age and sex appear at several points in this part of the system in somewhat specific ways. Thus, it would be useful to classify marriages by the age of the bride and bridegroom, divorces by the ages of the divorced couple and families by the age of the head; and it would be useful to classify lone parents by sex.

1. Year of marriage

11.31. The year of marriage is important in connexion with the duration of a marriage both while it continues and when it is terminated by divorce or death.

2. Marriage and remarriage

11.32. For either partner, a marriage may be the first marriage or a remarriage. It is useful to distinguish between the four possibilities because of the great difference in the average age of the partners in first marriages and remarriages. For instance, in Britain in 1970 according to the United Kingdom Central Statistical Office (226, No. 3, table 5) age at first marriage was 24.4 years for men and 22.5 years for women; and, at remarriage, 45.1 for men and 41.7 for women.

3. Number of children

11.33. The number of children on various definitions are needed at various points in the present part of the system. It may be useful to classify married couples by number of children (*a*) born to the marriage, (*b*) surviving and (*c*) dependent; and it may be useful to classify families by number of dependent children. Children are also an element in the measurement of size and composition discussed in the following subsection.

4. Size and composition

11.34. Size means simply the number of people in a family or household. However, we should almost certainly wish to distinguish children from adults, separating, for example, a family or household composed of a married couple and two children from one composed of a mother and three children, or of a father, two children and a grandmother.

11.35. Relationships within the household are also important in some contexts. A man and woman living together with their own children may not be be the same thing, for all purposes, as a man and woman living together with adopted children or with one another's children by a previous marriage or liaison. Marital status enters as a further complicating factor.

5. National or ethnic origin

11.36. Classification by these criteria is needed in many contexts but circumstances are so different from country to country that the most useful categories vary enormously. For instance, the redrawing of national frontiers may lead to a shift in the composition of the neighbouring population in terms of national origin and language; population movements within a multi-lingual country may gradually bring about similar shifts; and international migration may bring about changes in the ethnic composition of the countries affected.

11.37. National or ethnic origin is introduced at this point, though it is recognized in section B.5 of chapter XII below that ethnic origin is frequently regarded as a dimension of social class.

6. Religion

11.38. This classification may also be important though in countries in which a substantial proportion of the population do not signify their beliefs by attending places of worship it may be rather elusive. Like ethnic origin, it is sometimes regarded as an indicator of social class; and this is referred to in section B.6 of chapter XII below.

7. Urban or rural area

11.39. As an indicator of location, it is useful to classify families and households by urban or rural area as well as by geographical area mentioned in paragraph 10.30 above. This dichotomy, which could be expanded to provide a graded measure of population density, is important in many contexts, such as educational facilities and the demand for them, employment opportunities and the extent of the local work area.

8. Sector

11.40. In classifying institutional households it is likely to be important to distinguish between those run by private organizations and those run by public authorities. Private organizations may or may not be profit-making.

9. Purpose

11.41. Among the non-private establishments in which individuals may live for extended periods of time are orphanages, homes for old people, hospitals, asylums and prisons. The different purposes of these institutions clearly need to be recognized.

10. Size

11.42. As in the case of families and private households, size may also be important in the case of non-private establishments.

11. Denomination

11.43. Since many institutional households are run by religious organizations, a classification by denomination might be useful.

G. Recommended series

11.44. The items of data, classifications and social indicators in respect of family formation, families and households are set out in table 11.1 below.

11.45. As can be seen, table 11.1 is divided into three panels relating respectively to: married couples, marriages and divorces; families; and households, private and institutional.

11.46. The items of data in all three panels are similar and relate to stocks and flows. In order to complete the stock-flow matrices in the standard form reference must be made to the data in table 10.1. In that table, for instance, information is provided on deaths, emigrants and immigrants classified by marital status.

Table 11.1. Family formation, families and households: items of data, classifications and social indicators

Items of data	*Characteristic classifications*	*Other classifications*	*Social indicators*
	A. Married couples, marriages and divorces		
(a) *Married couples, marriages and divorces*			
1. Number of married couples	Date, duration and nature of marriage (first marriage etc.), number of children born to marriage, surviving, dependent	Age of partners, geographical area	Ratio of first marriages of males (females) to population of bachelors (spinsters) Ratio of remarriages of males (females) to males (females) widowed or divorced
2. Number of marriages	as above (omit number of children)	as above	Proportion married of males (females) of marriageable age
3. Number of divorces	as above (add number of children)	as above	Proportion of marriages dissolved by divorce Average duration of marriages dissolved by divorce Average duration of marriages dissolved by death
	B. Families		
(a) *Families*			
1. Number of families	Size and type, national or ethnic origin, urban or rural area	Age and sex of members, socio-economic class, income, geographical area	Proportion of families containing a married couple Average size Average number of dependent children Average number of economically active members
2. New families established	as above	as above	
3. Changes of state (including dissolution) of existing families	as above	as above	
	C. Households, private and institutional		
(a) *Private households*			
1. Number of private households	Size and type, national or ethnic origin, urban or rural area	as above	Proportion of private households containing one or more families Proportion of private households containing one or more pensioners Average size
2. New private households established	as above	as above	
3. Changes of state (including dissolution) of existing private households	as above	as above	
(b) *Institutional households*			
1. Number of institutional households	Sector, purpose, size, denomination	Geographical area	Proportion of population living in institutional households
2. New institutional households established	as above	as above	
3. Changes of state (including dissolution) of existing institutional households	as above	as above	

1. Indicators connected with married couples, marriages and divorces

11.47. The first two indicators relate to the proportion marrying in various groups in the population. If classified by age, a time series of them brings out any tendency there may be for first marriages to take place at younger ages and for remarriages to increase in relation to the widowed and divorced population.

11.48. The proportion married in the population of marriageable age is intended to indicate the desire for and acceptance of the married state. It is to be expected that in any society, a minority of the adult population will prefer celibacy or fail to find a marriage partner and that the remainder will marry. It is also to be expected, conventionally at any rate, that almost all married couples will live together unless separated by divorce or death. However, in societies which put few obstacles in the way of unmarried couples living together, less need may be felt to marry or, if one does, to continue to live with one's marriage partner. Further, in societies of this type in which divorce is difficult or impossible, it may be found that most people are married but that many people live with someone other than their marriage partner. The interpretation of this indicator depends, therefore, on the *mores* and legal arrangements of different societies.

11.49. The proportion of marriages dissolved by divorce indicates the importance of divorce as opposed to death in dissolving marriages.

11.50. The average duration of marriages dissolved by divorce or by death indicates the effect of divorce in shortening the duration of marriages.

2. Indicators connected with families

11.51. The proportion of families containing a married couple provides a link between families and married couples and indicates the importance of lone parents as family nuclei.

11.52. The average size of families is of interest in connexion with consumption patterns and housing programmes.

11.53. The average number of dependent children is of interest in connexion with welfare programmes.

11.54. The average number of economically active is an indicator of the economic base of the family.

3. Indicators connected with households

11.55. The proportion of private households containing one or more families indicates the importance of families as opposed to non-family arrangements in the formation of households.

11.56. The proportion of private households containing one or more pensioners, when classified by, say, size of household or income, provides some indication of the circumstances in which pensioners live.

11.57. The average size of households overlaps with and somewhat extends the concept of average size of families considered in paragraph 11.52 above. It may be the more useful concept since surveys of family expenditure often relate, in fact, to households.

11.58. The proportion of the population living in institutional households indicates the importance of these alternatives to private households.

XII. SOCIAL CLASS, STRATIFICATION AND MOBILITY

A. Individuals and classes

12.1. The fact that not all individuals are alike has led from time immemorial to the formation of social groupings and the recognition of different social classes. This type of classification is based on characteristics of individuals which, it is thought, will enable them to be assigned to more or less homogeneous categories; these categories are usually hierarchical so that we can speak, for instance, of an upper, a middle and a lower class; and the attempt is often made to associate differences in class characteristics with differences in attitudes and interests, so that much of social and political history can be discussed in terms of class conflict.

12.2. The concept of class is a difficult one and so is its use as a tool of social analysis. In this chapter we shall largely be concerned with the following issues.

12.3. First, the dimensions of class, such as status, achievement, power and so on, and the possibilities of recording and measuring them. Attempts are sometimes made to define a single measure of class by averaging these different components but for most purposes it is desirable to keep them separate since their influence varies widely from one field of analysis to another.

12.4. Second, evaluation, that is the basis on which individuals and groups are rated. Thus we may have objective ratings, made by survey teams using more or less well-defined criteria; or accorded ratings, obtained by asking a sample of respondents to order or quantify the social status of different occupations; or subjective ratings, in which individuals are asked to place themselves on a preassigned social scale.

12.5. Third, stratification and mobility, that is to say the extent to which individuals and families are fixed in a certain position on the social scale or are capable of movement up and down it. Investigations carried out over the past generation suggest that on the whole social mobility is fairly high, at least in many Western societies. It has to be remembered, however, that most societies contain minority groups whose mobility patterns may differ greatly from those of the majority.

12.6. The topics which have just been outlined are important and extend over much of the ground covered by writings on social class. They do, however, view the matter largely from the point of view of the individual without much regard to the part played by institutions. Yet, clearly, institutions hallmark achievement, confer status and devolve power. Many of these institutions are private but others are public: states, regional groupings of states and the bureaucracies that serve them. Institutional power and the consequences of the membership of institutions are not discussed here in any detail but they need to be kept in mind as a complement to the power of individuals arising from their position in the social hierarchy.

B. The dimensions of class

12.7. Most people would probably say that the term social class meant something to them even if they found it very hard to define. It would indicate a degree of recognition, latent or overt, by the community, based either on inherited characteristics or on personal achievements, which affected the individual's power and influence in the community. In the general estimation, an individual of ancient and distinguished lineage will be placed higher on the social scale than one whose family background is hardly known. The same can be said, in occupational terms, of those in prestigious positions, such as judges or bishops, as against those in humble positions, such as dockers or dustmen; in terms of wealth, of the rich as against the poor; and, in terms of education, of the learned as against the ignorant. This list could easily be extended, and the importance assigned to its different components varies widely from epoch to epoch and from country to country.

12.8. Let us now look a little more closely at these dimensions of class and at the possibilities of recording and measuring them.

1. Family connexions

12.9. This indicator probably corresponds most closely to the popular conception of class, particularly if we consider that on the whole it is the members of the more distinguished families that are likely to be able to give a fairly full account of their family's history. It may be a useful indicator since membership of an old and distinguished family gives advantages to an individual, and consciousness of this may induce in him a broader outlook than he might otherwise possess. On the other hand, many old families are set in a narrow and exclusive mould which is unlikely to confer much benefit either on individuals or society. It must also be recognized that remembrance of family does not necessarily imply that the scope of the family's activities has ever been very wide. It is not difficult to find individuals who take an understandable pride in being the fourth or fifth generation of their family to work as farmers, wine merchants, fishmongers or carpenters in a particular locality. Indeed, this factor is probably at work throughout the social spectrum: it would seem that there are, or were, hierarchies of costermongers, gypsies and vagabonds based in part on considerations of family and descent.

12.10. How are we to record and measure this indicator? In the first place, it seems clear that what is being classified is the family, the individual taking on the rating accorded to the family. In the second place, it would seem to be the known continuity of the family that counts rather than its present position, which will be influenced by the occupational prestige of its head and by its current wealth. This suggests that, in the terminology of social mobility studies, this indicator will largely serve to discriminate families of stayers from families of movers. The stayers are likely to remember their past whereas the movers are likely to

lose touch with it in their periods of depression. If this is correct, the stayers could, in principle, be classified by some long-run criterion of their family's position as well as by its current state, whereas only the current position would be known in the case of movers.

2. Occupational prestige

12.11. This indicator, though different from the last, also corresponds to an important strand of popular thought in the matter of class: in any country, there seems to be a fair degree of consensus on the social ranking of different occupations. This dimension of class is usually considered to reflect individual achievement rather than family position. But we should not overrate the meritocratic content of occupational ratings: there are dim as well as brilliant performers in all occupations; and opportunity may be as important a factor as ability in determining individual admission into any occupational group.

12.12. The occupational dimension is one of the easiest to handle in terms of available statistics; and it is doubtless for this reason that it is widely used, for instance in the study of social mobility.

3. Income and wealth

12.13. These are economic rather than social indicators but, since high income and wealth are usually associated with power, they are commonly regarded as important dimensions of social class. It can also be said that many advantages which would generally be considered to affect social status are more accessible to the rich than they are to the poor.

12.14. While information on individual wealth (or net worth) is not usually available, information on income is collected very generally. It has the advantage of being numerical and does not require the use of scaling techniques.

4. Education

12.15. Education, besides being a source of potential enjoyment in its own right, confers many advantages and tends to affect attitudes and points of view. It is probably accepted as an important indicator of social status in all countries.

12.16. There are several ways in which an individual's educational level can be assessed: number of years in the educational system, type of institutions attended, subjects studied and qualifications obtained. It is desirable, as far as possible, to distinguish between time spent in acquiring a liberal education and time spent in purely technical pursuits. The latter probably contributes little to this dimension of social class; its influence asserts itself by widening the range of occupations that can be pursued.

12.17. In addition to the possession of a general education, a small number of individuals devote their lives to learning and research. These people usually enjoy a high social status, but clearly this aspect of education is best treated under the head of occupational prestige which was considered in subsection 2 above.

5. Ethnic origin

12.18. Many populations are made up of several ethnic groups and their differences are likely to lead to rivalry and attempts by some groups to establish a hierarchy in their own favour. As a consequence, ethnic origin is sometimes regarded as an independent dimension of class. But in other cases, members of different ethnic groups may be found in any class as determined by family, occupation, wealth and education. Where this happens it is not so clear that ethnic origin is an independent dimension of class.

6. Religion

12.19. Considered as an independent dimension of social class, religion would seem to be in much the same position as ethnic origin. In some countries there may be a dominant religion or sect, membership of which confers social status; and in others social status may be otherwise determined and religious affiliation may simply be correlated with status. It will therefore be observed that few members of lesser religions and sects will be found in the upper class; but if an individual is for other reasons in the upper class his religion will not count against him.

12.20. This situation provides an example of the problem of identification, familiar to economists: do observations on the quantity and price of a commodity reflect a demand relationship, a supply relationship or a mixture of the two? The answer is that without more information we cannot say, and the same would seem to be true in the present case; religious affiliation or ethnic origin may confer social status or they may not, though in either case they are correlated with other indicators of class.

7. Power

12.21. There seems to be general agreement that social class is intimately connected with power though it is not easy to see how power is to be measured directly without reference to such dimensions of social class as have just been considered. Power may be exercised in many different fields such as ideas, politics and business. In a stable society the connection may be close but under transient conditions it may not be.

C. The evaluation of status

12.22. In this section we shall consider three methods of evaluating status: the objective, the accorded and the subjective.

1. Objective status

12.23. This term is used to indicate status evaluated by an objective observer or research team. The attempt is made to record individuals in terms of such indicators as those already mentioned and, perhaps, to combine these indicators into a single index of social status.

2. Accorded status

12.24. This type of indicator is based on the views of the community as represented by a sample of respondents. The dimension of social class most usually treated in this way is occupation: respondents are asked to order a list of occupations in terms of their rating of the social prestige associated with them. There is evidence of a considerable degree of consensus when this method is applied.

3. Subjective status

12.25. A third method of evaluating status is to present a sample of individuals with a hierarchical list

of social categories and ask them to place themselves on the list.

12.26. Each of these methods has its uses though the first is the only one that can be expected to yield detailed information about the dimensions of social class.

D. Social stratification and mobility

12.27. Whichever indicator of social class we study, we are likely to find a large amount of individual variation and a substantial amount of positive correlation between the indicators of the main dimensions. We are also likely to find that the distribution of individuals in most dimensions does not change very much over time.

12.28. If we are dealing with a numerical indicator, such as income or wealth, the main factors making for growing, declining or constant inequality can be analysed following the method adopted by Hart and Prais (91) in their study of business concentration. If, over a period, incomes grow at different rates independent of their initial size, then inequality is bound to increase by an amount which depends on the dispersion of the growth rates. This increase in inequality will be reduced or even reversed if the small incomes tend to grow faster than the large ones, that is to say if there is a negative correlation between initial size and growth rate. If, on the other hand, there is a positive correlation between these two variables the increase in inequality will be accentuated.

12.29. If size is measured in terms of logarithms and as a deviation from the mean size, if β denotes the regression coefficient of the growth rate on initial size and if ρ denotes the coefficient of correlation between size and growth then, as is shown in Hart and Prais (91): inequality remains unchanged if $\beta = \rho$; and the ratio of the variance at the end of the period to the initial variance is $(\beta/\rho)^2$.

12.30. Where the indicator of social class is not numerical, the above method cannot be applied. Moreover, while the method enables us to analyse changes in the degree of inequality, it does not enable us to see how far individual families are static or mobile. If the distribution of individuals over social classes remains constant, this may be because families remain fixed in a certain part of the distribution or because their continual movement up and down the social scale is so balanced that the distribution does not change.

12.31. A high degree of social mobility does not imply that social inequality will diminish over time; it implies only that the families occupying particular strata are constantly changing as a consequence of movements up and down the social scale. Policies to increase mobility must therefore be distinguished from policies to increase equality.

E. Social mobility as a stochastic process

12.32. In some societies an individual's social status is determined at birth and in turn determines the status of his descendants. The rules governing marriage and descent may be so rigid that no social mobility is possible either between or within generations. Alternatively, there may be no rules governing marriage and descent and there may be a positive probability of moving from any status group to any other. At the other end of the spectrum to the perfectly rigid society is the perfectly mobile society in which the probability that a man, or his offspring, will eventually be found in any given status group is independent of his initial status group.

12.33. In societies without rigid rules, a comparatively small number of people are typically found at the upper end of the social scale and a considerable concentration is found somewhere towards the bottom of it. The main purpose of studying social mobility is to find how far the dispersion of social status is due to forces which tend to keep individuals and their descendants indefinitely in some small range of the distribution and how far it is due to individuals and families constantly changing their social status so that the composition of any range of the distribution varies from period to period and from generation to generation, while the proportion of the population in the range changes little if at all.

12.34. Here we shall be concerned with the mobility of a family from generation to generation and with the mobility of an individual over his life span. Most studies of either of these subjects are based on grouped occupational data and so the discussion of intragenerational social mobility given below is equally relevant to the question of occupational mobility which is mentioned in section D.6 of chapter XVIII below.

12.35. In an important sense, intergenerational mobility is somewhat easier to model than intragenerational mobility. The reason is that there is a simple link between father and son in which time can be ignored whereas an individual may change his occupation frequently or infrequently and the rate of change may vary from one individual to another and for the same individual at different stages of his life. As a consequence, various complications arise.

F. Intergenerational mobility

12.36. The usual basis for this kind of study is a matrix which relates the occupational statuses of a sample of sons to the occupational statuses of their fathers at approximately the same stage in their careers. If the rows relate to the son's status and the columns relate to the father's status, then a matrix of transition proportions can be formed by dividing the numbers in each column by their sum. The result of this operation is a *C*-matrix as described in chapter VII above with the special feature that all its column sums are one.

12.37. If this matrix can properly be said to represent a regular Markov process, as described in Kemeny and Snell (117), then a society whose status movements are governed by it in successive generations will eventually reach a stationary status composition vector which depends entirely on the matrix and not at all on the initial status composition vector. This stationary vector (the dominant characteristic vector of the matrix) is not difficult to calculate and it might be expected that it would not differ greatly from the observed composition vector of a society which had been developing for a long time under more or less unchanging conditions. This was found to be the case in Prais (168 and 169) from an analysis of the data for Britain provided in Glass (81, chapter VIII).

12.38. The outcome of this type of analysis is that while societies tend to have an approximately fixed status composition vector, it does not at all follow that individual families retain the same status through time: what is observed is the outcome of continuous movements up and down the social scale from generation to generation. This can be seen by calculating the num-

ber of generations which a family can expect to stay in each social class and by comparing these numbers with those calculated for a perfectly mobile society. Such a society is defined as one in which the son's status composition vector is independent of his father's status. The transition matrix, C^* say, of the perfectly mobile variant of a society is one which has the dominant characteristic vector of the C-matrix repeated in each of its columns. Prais showed, in the papers just referred to, that the ratio of the lengths of expected stay based on C and C^* varied between 1.11 and 1.59 indicating, by their closeness to 1, a high degree of mobility.

12.39. The validity of this type of analysis depends on the acceptability of a number of assumptions, the implications of which can be illustrated as follows.

12.40. First, it must be possible to interpret the elements of the C-matrix as probabilities that apply to each member of a given state. In a multiracial society the probabilities may be quite different for different ethnic groups. The use of a pooled matrix will lead to results which depend on the relative size of the groups and will not be characteristic of any one of them. The proper treatment here is to analyse the groups separately. An illustrative example of this is given in Stone (204, section 8).

12.41. Second, an essentially similar difficulty will arise if the probabilities of movement are not independent of the social status of the grandfather. This assumption can be examined by tabulating the father-son transitions according to the grandfather's social status and observing whether there are important differences in the different matrices. This is an example of extending the state-space which was illustrated in a different context in section C.4(c) of chapter VII above.

12.42. Third, it is possible that in practice C-matrices of this kind are not fixed from generation to generation. A particular case, in which the occupational structure of society is changing, is discussed in Prais (169). A general theoretical solution follows the lines of section C.1 of chapter VII above.

12.43. Fourth, the link between father and son is not as straightforward as it seems to be. Even in the simple case of one father and one son it is desirable that their occupational statuses should be recorded at a comparable and, as far as possible, the final stage of their active careers. Further, the number of sons is variable and different classes may have different birth rates. As a consequence the evolution of society may differ systematically from the results given by the one-father-one-son model. This question, along with others mentioned in this section, is discussed in Bartholomew (16, chapter 2).

12.44. Finally, by considering only fathers and sons the analysis is male dominated and therefore one-sided. A more symmetrical treatment of the sexes would seem to be highly desirable.

G. Intragenerational mobility

12.45. This kind of study is also usually based on matrices of movements between occupational status groups, but in this case it is the individual who is moving throughout his span of active life rather than the family which is moving from generation to generation. In this context, occupational status would seem a much less certain indicator of social status than it was when fathers and sons were compared at a final stage in their careers. For instance the poor boy who starts by selling newspapers and ends by owning a large newspaper publishing business clearly changes his social status in the course of his active life; whereas the son of a rich proprietor of a private company who starts on the shop floor to learn the business in the confident expectation that he will eventually succeed his father, clearly does not. We may also encounter some of the difficulties referred to in the preceding section, but there are also additional problems to be considered.

12.46. These arise from the fact that changes of occupational status take place irregularly the whole time and do not take place at the rate of one per interval of observation. We might assume that the speed of change was the same for all individuals and examine the process that determined the timing of movements; or, alternatively or additionally, we might accept the assumption that different individuals are likely to have different speeds of change. Both of these problems were recognized by Blumen, Kogan and McCarthy (32) in their study of the industrial mobility of labour.

12.47. If we assume the number of moves in an interval to be determined by a stochastic process common to all individuals then, as Bartholomew shows (16, chapter 2), we encounter an aggregation problem and the transition matrix, C, will only define a Markov chain if the stochastic process governing the movements is either regular or random.

12.48. From the quarterly transition data given in Blumen, Kogan and McCarthy (32) it would appear that some other form of process must be at work since it was found that τ-period transition matrices did not agree with 1-period transition matrices raised to the power of τ and, in particular, that their leading diagonal elements were systematically underestimated.

12.49. The particular form of the discrepancy just noted led to the idea of generalizing the original model so as to allow for the possibility that different individuals have different speeds of movement. In Blumen, Kogan and McCarthy (32) this generalization took the form of a mover-stayer model in which it is assumed that some individuals never move and that the remainder move in a manner determined by the original model. The introduction of this generalization substantially improved the agreement of the model with observations.

12.50. As is to be expected, a successful analysis depends above all on the choice of an appropriate set of states which will ensure that the assumptions of the model are at least approximately satisfied. It may well be that in this context the length of time spent in a status group would be a useful additional criterion of classification.

12.51. Much work has appeared recently in the area discussed above; for instance, by McFarland (133), McGinnis (134) and Spilerman (191, 192).

H. Classifications

12.52. The classifications relevant to families, households and their members are distributed over this chapter and the ones that precede and follow it. By intention, the first set relate to marital status and other demographic variables, such as family size and composition, those in the present chapter to social status and those in the next chapter to economic status; but it is difficult to keep the discussion entirely separate.

12.53. The more important dimensions that have been suggested for social class were discussed in section B above. As we have seen, national or ethnic origin and religion were dealt with in chapter XI, and so here we shall concentrate on the other dimensions and, in particular, on family background and occupational prestige. Mention will also be made of income and wealth and of education, although the former is discussed at length in chapter XIII and the educational attainment of the population is part of the subject matter of chapter XVII.

1. Family background

12.54. It is difficult to think of data series which would have much discriminatory power and at the same time be capable of collection on a sufficiently large scale. For instance one might ask for the names or other characteristics of ancestors in the father's line, or more generally, and classify individuals according to the number of generations they could give any account of. But, if this were done, it might be expected that almost everyone would be able to give some account of his grandfather's generation and that only a small proportion of the population would be able to go much further back.

12.55. A method which might prove more illuminating as well as being easier to apply is to enquire about the final occupations of an individual's father and grandfather. These would need to be converted onto a scale of occupational prestige and averaged to provide an indicator of the social status of forebears in the two preceding generations. If it were possible it would be desirable to go further back in time and, in the limited number of cases in which sufficient information is available, this might be accomplished by the methods of family reconstitution as described in Wrigley (293).

12.56. In the case of members of illustrious families and others who have made their mark in some field of endeavour fuller records are likely to exist. Some very different examples of this kind of study are provided in Galton (77), Galton and Schuster (78) and Erickson (62). While of great interest in itself such material would be very difficult to work into a general statistical system and would relate to only a small proportion of the population.

2. Occupational prestige

12.57. In order to base an indicator of social status on information about an individual's occupation it is necessary to group occupations into a small number of groups between, say, three to ten.

12.58. This method has been used in Britain since the census of 1911 to group the population into five social classes. The grouping of occupations is intended to reflect their general standing in the community. The classification takes account of employment status as well as occupation, the classes are described largely in terms of skill, and, over time, there is some variation in the assignment of occupations to classes which is designed to preserve the basic criterion of standing in the community. Married women who are not economically active are assigned the social class of their husbands.

12.59. In the United Kingdom Central Statistical Office (226, No. 3, table 16) a 10 per cent sample of the economically active population recorded in the 1966 census is cross-classified by social class and socio-economic group. This latter classification, into 17 categories, is based on the recommendations of the United Nations Conference of European Statisticians (238).

12.60. Occupational prestige has been much studied in terms of accorded status. In Hodge, Siegel and Rossi (96) a replication in 1963 is described of the National Opinion Research Center's 1947 study of prestige accorded in the United States to ninety occupations. A correlation of 0.99 is obtained between the occupational prestige scores in the two surveys. High correlations are also found with the ratings given for 1925 and 1940 by earlier writers using somewhat different methods. This study also brings out the fact that if the occupations are classified into the broad categories professional, other white collar and blue collar, then there is a considerable overlap in the prestige accorded to individual occupations assigned to each of the categories.

12.61. An international comparison of prestige scores is given in Inkeles and Rossi (109). The prestige scores of a limited (and varying) number of occupations in Britain, Germany, Japan, New Zealand and the USSR were compared with those in the 1947 U.S. study. The high correlations obtained indicate a considerable measure of consensus between countries. A more extensive study in which prestige scores for 23 countries are compared with those for the United States in 1963 is given in Hodge, Treiman and Rossi (97). In this case the results suggest that while there is some similarity in the prestige structures of different countries it is not perfect and the variations are probably connected in some way with the stage of economic development.

3. Income and wealth

12.62. Although income and wealth are discussed in detail in the next chapter, they are mentioned here because they are often used to indicate a dimension of social class. In view of the relative scarcity of statistics of personal net worth, it is mainly income that is used in this way. Although there is some association between income, wealth and occupational prestige scores, they clearly do not cover the same ground. The prestige scores do not allow for inherited wealth or for the great range of incomes that are paid to, say, company officials.

4. Education

12.63. A number of indicators of educational achievement are suggested in panel C of table 17.1 below. While the highly educated tend to be accorded prestige and to earn high incomes it is clear that school teachers for instance, though frequently highly educated, do not normally earn high incomes. Accordingly, the association with other indicators of social class is likely to be far from perfect.

5. A synthetic indicator of social class?

12.64. It has been mentioned that many writers emphasize the importance of keeping the different dimensions of class separate and do not favour their combination into a synthetic indicator. This attitude raises two questions: (i) are there uses for a synthetic indicator; and (ii), if so, can we construct one that is acceptable? The priority given to the construction of synthetic indicators depends on the answer to these questions.

12.65. If the answers are affirmative, it would seem that there are two methods that might be adopted.

12.66. The first is a principal components analysis of the indicators of the different dimensions. Since all of these are supposed to represent some aspect of social class, it might be reasonable to take the first component as an indicator of social class. This approach raises a number of questions on which experience is needed.

12.67. The second is to combine the indicators into an index-number. Since the units are different for different indicators and since the scales for some of them are arbitrary, thought would have to be given to the question of scaling. It is likely that all the indicators are positively skewed and, if they could be approximated by log-normal distributions, it would seem reasonable to standardize them so that their logarithms had mean zero and variance one. There would remain the problem of weighting, the simplest solution to which would be to give the indicator(s) of each dimension a weight of one.

I. Recommended series

12.68. The items of data, classifications and social indicators in respect of social class, stratification and mobility are set out in table 12.1.

12.69. As can be seen, table 12.1 is divided into three panels relating respectively to: social class; social stratification; and social mobility.

12.70. The items of data in the first panel are intended to relate to different dimensions of social class: family background, occupational prestige, income and wealth, and education.

12.71. In the second and third panels there are no new items of data but a number of social indicators are suggested which can be constructed from the data series in panel A.

1. Indicators connected with social class

12.72. The average occupational prestige score of father and grandfathers is intended to give some indication of the social standing of the family in recent generations. Since these scores are generally not available for the past, recent scores would have to be used. Alternatively, an ordinal indicator, in the form of a hierarchical set of social categories might be adopted.

12.73. The respondent's own occupational prestige score is intended to indicate his or her social standing. We have already seen the difficulty in giving an independent score to most married women, who are either not economically active or engage part time in an occupation which does not reflect their position.

12.74. No social indicators are shown in respect of income and wealth since these would be the same as the data series.

Table 12.1. Social class, stratification and mobility: items of data, classifications and social indicators

Items of data	*Characteristic classifications*	*Other classifications*	*Social indicators*
		A. Social class	
(*a*) Occupation of father and grandfathers	Prestige groups	Age and sex of descendant, geographical area, national or ethnic group, religion	Average prestige score
(*b*) Own occupation	as above	Age and sex, geographical area, national or ethnic group, religion	Prestige score
(*c*) Income and wealth			
1. Family net worth		as above	
2. Family income		as above	
3. Own earned income		as above	
(*d*) Educational level finally reached		as above	Educational score
		B. Social stratification	
(*a*) Stratification in various dimensions (data as in panel A above)		as above	Proportion of population in (i) the highest and (ii) the lowest decile according to each of the above indicators and the data series for income and wealth
		C. Social mobility	
(*a*) Intergenerational mobility (data as in (*a*) and (*b*) of panel A above)		Sex, geographical area, national or ethnic group, religion	Descendants' composition vector for each occupational prestige class of fathers based on (*a*) and (*b*) of panel A above Stable vector of transition matrix Vector of ratios of actual mean staying times to mean staying times based on the stable vector
(*b*) Intragenerational mobility (data as in (*b*) of panel A above)		as above	Composition vector of age-group τ for each occupational prestige class at τ-θ for different values of τ and θ based on (*b*) of panel A above

12.75. Scores intended to indicate the final level of education could be based on the time or cost required to reach that level or on the net lifetime earnings associated with it. If the second method is used the earnings ought to be discounted and the results are likely to be strongly affected by the rate of discount used. In principle, the calculations could be refined by taking into account the qualifications obtained. As in the case of occupational prestige scores, a hierarchical set of categories might be adopted in place of an attempt at cardinal measurement.

2. Indicators connected with social stratification

12.76. The indicators relating to social stratification provide information about the distribution of the characteristics listed in panel A. The use of the upper or lower decile, as suggested in the table, presupposes numerical data of the kind available in respect of income and wealth. In the case of the prestige and educational scores the intervals of classification may be coarse and uneven in which case the upper bound of the lowest group and the lower bound of the highest group can only be expressed qualitatively.

12.77. No synthetic indicator of socio-economic class is proposed in the table and, if one is needed, a means must be found of combining the different series. Some suggestions were made on this point in paragraphs 12.66 and 12.67 above.

3. Indicators connected with social mobility

12.78. The indicators suggested in this panel are, again, all based on the data series in panel A.

12.79. The class composition vectors enable a complete transition matrix to be formed connecting family status in successive generations. These calculations, for the reason already given, are usually carried out with respect to males; and some of the problems encountered have been outlined in section F.

12.80. The stable (or dominant characteristic) vector of the transition matrix indicates the class composition to which a society would tend if the transition matrix were fixed.

12.81. The vector of ratios of actual mean staying times in the different classes to the corresponding mean staying times implied by the stable vector provides a measure of the degree of mobility in society as a whole or, if it is heterogeneous, in the different, supposedly homogeneous groups of which it is composed.

12.82. The social indicators proposed in respect of intragenerational mobility enable transition matrices to be formed connecting statuses reached in different age groups. Some of the problems encountered have been outlined in section G. As a result of the additional complications that arise in this case, no further indicators are suggested in respect of intragenerational mobility.

XIII. THE DISTRIBUTION OF INCOME, CONSUMPTION, ACCUMULATION AND NET WORTH

A. Introduction

13.1. Income accrues in the first instance to individuals, and just as individuals can be grouped into households so can their incomes be pooled to give the total income of the household. In this part of the system we are concerned with: the distribution, over groups of individuals, of income arising from productive activity; and, over groups of households, of a variety of income totals, consumption expenditures, saving and net worth.

13.2. In addition to information on the distribution of personal consumption expenditures it is useful to measure the distribution of total consumption expenditures, that is to say personal expenditures plus government and other expenditures, such as those on education and health, which can be allocated directly to individuals and households.

13.3. As we saw in section D of chapter III above, a system of statistics relevant to these questions has been drawn up by the Statistical Office of the United Nations (260). A brief description of this system is given in the following section.

13.4. There are two important topics not dealt with there. One of these is the question of net worth, which has already been referred to. The other is the question of the dynamics of income formation. Something will be said below about each of these questions.

13.5. The remainder of the chapter deals with classifications, recommended series and social indicators.

B. The system of distribution statistics

13.6. The SNA has only a single sector for households and so an important purpose of the system described by the United Nations Statistical Office (260) is to divide this sector according to a number of criteria of classification. The relationships between this complementary system and both the SNA and the MPS are described in detail.

13.7. The first stage of the system consists of classifying in various ways the income arising from economic activity accruing to individuals and to households. This income is itself divided into two main parts: (*a*) primary income which consists of compensation of employees, income of members of producers' co-operatives and entrepreneurial income, including net rent actual and imputed; and (*b*) property income which consists of net interest and dividends. The sum of these two types of income is termed distributed factor income.

13.8. From this point onwards, the variables classified relate only to households. The second stage consists of moving from factor income distributed to households to the income total, termed available income, which can be used for final consumption expenditures and saving by households. The main transfers linking these two income concepts are all forms of cash benefit received from the state, direct taxes and social security contributions, gifts and remittances, and premiums and benefits connected with casualty insurance, pension funds and annuity policies. Final consumption expenditures relate to personal expenditures at market prices and so no account is taken, in tracing the effects of the successive transfers that lead from the first income concept to the second, either of benefits in kind or of indirect taxes and subsidies.

13.9. At the third stage, available income, adjusted for net contributions and premiums in respect of private pension funds and annuity policies, is divided between final consumption expenditures and saving.

13.10. At the fourth stage, saving, together with provisions for the consumption of fixed capital and net capital transfers received, is shown as financing gross capital formation and net lending; and the latter is set out as the excess of net financial assets acquired over net financial liabilities incurred.

13.11. Finally, the total consumption of the population is tabulated and compared with the sources of its finance. This expenditure total includes final consumption expenditure assigned to households by private non-profit bodies and industry as well as by general government and also subsidies paid by government in respect of items in this total.

C. The net worth of the household sector

13.12. Net worth represents the excess of assets over liabilities on a balance sheet. While sector and national balance sheets form an integral part of the SNA (255, tables 2.1, 2.15 and 2.16), detailed proposals in respect of definitions, classifications and standard compilations of balance sheet statistics were deferred at the time pending further discussions. Further steps have been taken by the United Nations Statistical Office (258, 264).

13.13. Statistics of this kind have been worked out for Britain in considerable detail and are presented in Revell and others (175), in Revell and Roe (176) and, in revised and amplified form, in Roe (179).

13.14. The net worth of a sector is increased through its saving, its receipt of capital transfers, the upward revaluation of its assets and the downward revaluation of its liabilities. A series of net worth, even if it is represented by nothing more than a series of accumulated saving expressed at constant consumer prices, appears to be useful in analysing and interpreting the aggregate consumption function of the personal sector, as demonstrated in Stone (197, 205). It seems likely that this result would apply also to analyses of the consumption and saving behaviour of different categories of household.

D. The dynamics of income formation

13.15. The statistics in the system set out by the United Nations Statistical Office (260) relate to par-

ticular dates or intervals and do not deal in detail with the changes that take place between dates or over intervals. The gradual transformation of incomes over time can be treated as a Markov process and analysed by methods formally similar to those described in section C.1 of chapter VII above. In order to apply these methods we should need, in addition to the opening and closing income distribution vectors, a transition matrix showing how each category of income changed (or remained the same) in the connecting interval.

13.16. Allowance would have to be made for: the disappearance of incomes through death and emigration; the consequent modification of existing incomes through inheritance; and the appearance of new incomes, mainly through new entrants into the labour force. A model of this kind has been described in Champernowne (43, 44, vol. 2, chap. 18 and 45) and some comments on this type of model in the context of the log-normal distribution have been made in Aitchison and Brown (5). The mover-stayer variant of the Markov model is described and applied to American data in McCall (132). For Britain the information available on transition probabilities for earnings in the mid-1960s has been described by the United Kingdom Central Statistical Office (225, No. 4, p. 29) and analysed in Thatcher (212). Clearly by combining the income model with the corresponding demographic model and allowing for socio-economic mating and fertility patterns, earning and saving propensities and the laws and customs of inheritance, a powerful tool would be available for studying the dynamics of the distribution of income. Some thoughts on this subject have been set out in Meade (138).

E. Classifications

13.17. The major classifications proposed by the United Nations Statistical Office (260) have much in common with the characteristic classifications set out in section F of chapter XI above. The main new feature is a classification by size of various concepts of income. Geographical area and urban or rural area are used generally; and so are type and durability of good or service in the classification of consumption expenditures. The other criteria mentioned are as follows.

1. Size of primary income

13.18. This is used to classify primary income and its components accruing to individuals only.

2. Size of distributed factor income

13.19. This is used to classify distributed factor income and its components accruing to both individuals and households; and also to classify transfers accruing to households.

3. Size of available income

13.20. This is used to classify almost all the main series, but typically not their components, in the case of households; and also to classify the total income and consumption of the population.

4. Size of saving

13.21. This is used to classify all the entries in the capital account of households. It may not turn out to be a very convenient criterion because many of the poorer groups of household may be found to have negative saving in the aggregate.

13.22. It is worth noting that no provision is made in the draft United Nations system (260) for classifications by size of consumption expenditure. This would seem to be a useful criterion because, especially in the case of entrepreneurs, it is likely to be more stable between households and over time than is available income. Since most expenditure on durables can be postponed in the short run, a classification by size of non-durable expenditure might be preferable to a classification by size of total expenditure.

5. Age and sex

13.23. These are used to classify distributed factor income accruing to individuals and many of its components. The age and sex of the head are used to classify most items in the case of households, including the total income and consumption of the population.

6. Socio-economic class

13.24. This is used to classify distributed factor income accruing to individuals and many of its components. The socio-economic class of the head is used to classify most items in the case of households, including the total income and consumption of the population.

7. Kind of economic activity and occupation

13.25. These are used to classify primary income accruing to individuals and its main components.

8. Educational attainment

13.26. This is used to classify distributed factor income accruing to individuals and its main components.

9. Number of earners

13.27. This is used to classify distributed factor income accruing to households and its main components.

10. Size of household

13.28. This is used to classify the main items in the case of households including the total income and consumption of the population.

F. Recommended series

13.29. The items of data, classifications and social indicators in respect of income, consumption and accumulation are set out in table 13.1 below.

13.30. As can be seen, table 13.1 is divided into three panels relating respectively to: the income of individuals and households; the final consumption expenditure and total consumption of households; and saving, consumer durables and net worth of households.

13.31. The items of data in the first panel relate to various concepts of income. Primary income is distributed over income earners; distributed factor income over recipients and households; and available income over households. Compensation of employees is not introduced here since it appears in panel B of table 18.1 below.

Table 13.1. The distribution of income, consumption and accumulation: items of data, classifications and social indicators

Items of data	*Characteristic classifications*	*Other classifications*	*Social indicators*
		A. Income of individuals and households	
(*a*) Primary income	Size of primary income	Age, sex, geographical area, urban or rural area, industry, occupation, national or ethnic origin, socio-economic class	Primary income per earner at current and constant prices
(*b*) Distributed factor income	Size of distributed factor income	For individuals: as above For households: as above (add size and type, age of head; omit age, sex, industry, occupation)	Distributed factor income per head of the population at current and constant prices
(*c*) Available income	Size of available income	as, for households, above	Available income per head and per household
		B. Final consumption expenditure and total consumption of households	
(*a*) Personal consumption expenditure	as above	as above (add type of consumer good or service)	Personal consumption expenditure per head at current and constant prices
(*b*) Personal food consumption	as above	as above (add type of nutrient element)	Personal food consumption per head at current and constant prices and in terms of various nutrients
(*c*) Total consumption of the population	as above	as above (omit type of nutrient element)	Total consumption per head at current and constant prices Ratio of personal consumption expenditure to total consumption of the population at current and constant prices
		C. Saving, consumer durables and net worth of households	
(*a*) Personal saving	as above	as above (omit type of consumer good or service)	Proportion of adjusted available income saved Personal saving per head at current and constant consumer prices
(*b*) Specific types of consumer durable	as above	as above	Proportion of households possessing each type of consumer durable
(*c*) Personal net worth	as above	as above	Personal net worth at constant prices Ratio of adjusted available income to net worth

13.32. The items of data in the second panel relate to personal consumption expenditure, personal food expenditure and the total consumption of the population.

13.33. The items of data in the third panel relate to personal saving, the possession of specific types of consumer durable and personal net worth. It will be remembered that information in respect of stocks of transport equipment and radio and television receivers was recommended in panel B of table 15.1 below.

1. Indicators connected with the income of individuals and households

13.34. The indicators recommended in this panel relate to one or other of the aggregates of income at current and at constant prices expressed either per earner, per head of the population or per household. The constant price variants are intended to be measured in terms of an index-number of consumer prices and to show how real income changes over time.

2. Indicators connected with final consumption expenditure and the total consumption of households

13.35. The first indicators mentioned in this panel are, in their aggregate form, of a kind obtainable from the SNA; the extensions recommended here arise on account of the many criteria of classification by which these aggregates can be decomposed.

13.36. The second group of indicators relates to food consumption and nutrition. The term "nutrients" is intended to cover the energy value of food consumption and its composition (in terms of protein, fat and carbohydrate), vitamins, calcium etc. and, where relevant, the degree to which these are derived from animal sources.

13.37. The third group of indicators is intended to show the movement in consumption per head of the population when this is increased by items not paid for out of personal expenditure.

13.38. The final group of indicators is intended to show the importance of these supplements to personal expenditure in the total consumption of the population.

3. Indicators connected with saving, the possession of consumer durables and net worth

13.39. The proportion of adjusted available income saved indicates the extent to which the household sector, or some part of it, devotes its income to saving rather than to spending. The qualification "adjusted" is needed because in the draft system (260) available income is not defined to equal consumption expenditure plus saving.

13.40. Personal saving per head indicates the movement of saving and is expressed either in money terms or in terms of its purchasing power over consumers' goods and services.

13.41. The proportion of households possessing various consumer durable goods indicates the degree of penetration of these goods into the potential market. It is perhaps of interest to note from the United Kingdom Central Statistical Office (226, No. 3, table 55) that in Britain in 1971: 91 per cent of households possessed a television set, 69 per cent a refrigerator, 64 per cent a washing machine, 51 per cent one or more cars and 38 per cent a telephone.

13.42. Personal net worth at constant prices is intended to measure the purchasing power of net worth over consumer goods and services expressed at constant prices.

13.43. The ratio of adjusted available income to net worth throws some light on the stability of this relationship, which might be expected if income were growing at a constant rate.

XIV. HOUSING AND ITS ENVIRONMENT

A. Introduction

14.1. In this chapter we are concerned with the quantity and quality of dwellings in relation to the needs of the population. Most people live in private households, in Britain the proportion is about 97 per cent, and in the last 20 years the demand for dwellings has risen considerably faster than the population. This is due to such factors as earlier marriage and the greater economic independence of both young and old and leads to changes in the composition of the housing stock. In addition to information about the number of dwellings of different sizes, it is also desirable to know something about structural characteristics such as age, state of repair and the availability of various facilities like running water or a fixed bath. By relating households of different kinds to dwellings of different kinds, it is possible to form a picture of the housing stock and gauge the points at which it fails to reach an acceptable standard.

14.2. But structural characteristics are not the only factor to be considered; environmental characteristics ought also to be taken into account. As we saw in paragraph 5.16 above, according to Wilkinson (281) house prices are on the whole rather more responsive to environmental than to structural factors. This means that we should obtain information on such matters as access to parks and open spaces, schools and shops, population density, social standing of the neighbourhood and typical journey to work times.

14.3. One way of studying environmental factors is to classify dwelling units by environmental as well as structural characteristics, as in Wilkinson (281). In planning future devlopments, however, it is desirable to keep track of the many changes that take place in the environment; and this task may be greatly helped by the construction of computerized data banks for towns and built-up areas. Something will be said in section C below about recent developments in the construction of urban data banks.

14.4. Other aspects of the housing situation considered here are ownership and tenancy and also private expenditure on accommodation. Here again great changes are taking place in some countries. In Britain, for instance, in the 20 years ending in 1970 the stock of dwellings rose by 35 per cent, those in owner occupation by 126 per cent and those rented from public authorities by 128 per cent; while, over the same period, dwellings rented from private owners fell by 55 per cent and those held under other forms of tenure fell by 13 per cent. At the end of the period about 50 per cent of the stock was in owner-occupation, 30 per cent was rented from public authorities, 15 per cent was rented from private owners and 5 per cent was held under other forms of tenure.

14.5. The section which follows is concerned with the housing stock: what is meant by a dwelling; in what ways can the stock be increased or diminished; on what structural characteristics is it desirable to have information. This is followed by a discussion of environmental characteristics and the role of urban data banks.

14.6. The next main topic concerns the housing conditions of the population; that is to say, the stock of dwellings in relation to the households and individuals who live in them and the various forms of tenure in operation.

14.7. The final topic is financial in character and relates to consumption expenditure on and the accounts of the providers of housing services.

14.8. The remainder of the chapter deals with characteristic classifications and with recommended series and social indicators.

B. The housing stock

14.9. The stock of dwellings, or living quarters, consists of all separate and independent premises, including vacant premises, used for human habitation whether or not they were originally designed for that purpose. This is not a simple concept and further details of its definition have been set forth by the United Nations Statistical Commission and the Economic Commission for Europe (250). The question of separateness is a particularly difficult one and in Britain the Department of the Environment has introduced a concept of "reasonably separate dwellings", that is household spaces which, though not consisting of structurally separate accommodation behind its own front door with independent access to the street, do provide adequate family accommodation with the exclusive use of basic amenities.

14.10. Housing units are of many kinds ranging from palaces to caves. In addition there are living quarters which are not housing units, such as hotels, rooming houses and other lodging houses, camps and institutions.

14.11. A dwelling is located in a structure and may or may not be coterminous with it. A structure is usually a building but it need not be: caves and caravans are instances to the contrary. A structure may contain one or more dwellings and may be wholly used for living purposes or may be only partly, or even minimally, used for that purpose. Thus some of the characteristics used in describing a dwelling, such as the materials of which it is made, its age and so on, are in fact characteristics of the structure in which it is located.

14.12. There are many other structural features of a dwelling on which it is desirable to have information: its size, the facilities it offers, its state of repair.

14.13. Leaving aside the more unusual forms of housing unit, such as caravans or tents, the stock can be increased by new construction, rehabilitation and conversion; and it can be reduced by demolition, conversion to other uses and neglect.

C. Environmental characteristics and the role of urban data banks

14.14. We have already seen the importance of environmental characteristics in connexion with the description of dwellings and, still more, in connexion with urban planning. This kind of information is seldom available and though it can be compiled for the purpose of a particular study, it is desirable to establish more regular arrangements embodying some agreement about what data are to be collected and how this is to be done. The means of collection need to be flexible because a great variety of changes take place the whole time which affect the environment of most urban areas.

14.15. If we look back to paragraph 14.2 it can be seen that most of the environmental characteristics mentioned there rest on data of two kinds: on the transport network (which in many cases reduces to the road network) and on land use. The remaining characteristics rest on socio-demographic data relating to the town's inhabitants.

14.16. The Land Use and Built Forms Unit of the Department of Architecture in the University of Cambridge has built up a data bank for the 36 New Towns designated or proposed in Britain since 1946. This bank is based on data relating to road networks and land use. In Lindsay, Cheesman and Porzecanski (126, 127) a comparative atlas of the New Towns and a detailed description of the construction and organization of the data bank are given.

14.17. The road network data start with a plan of the road system in each town, distinguishing different types of roads and intersections. This information (like all that follows) is described in terms of Cartesian co-ordinates so that the computer can reproduce it in the form of a map.

14.18. The land use data start with a plan of the zones (and, within zones, parcels of land) in each town and these are classified to different purposes. The land use code distinguishes 10 major uses, each greatly subdivided. The atlas shows five major categories: residential, industrial (including storage), commercial (offices, shops and public buildings), educational and open spaces. The categories of health and transport (stations, garages, airfields etc.) are omitted for lack of areal data.

14.19. What has been described so far is a data storage and retrieval system in which the retrieval can take the form of a printed map on which any number of the items of data can be superimposed. The data relate to the basic features of the town. With this information a number of further steps can be taken.

14.20. First, the computer can be programmed to print out any derived data that can be expressed in distance or area.

14.21. Second, additional data can be introduced on physical objects and their location: for instance, dwellings, post boxes, lamp posts, public lavatories. With this extra information more derived data series can be calculated: for instance, the number of houses per hectare on any zone or parcel of residential land, the number and location of dwellings more than 250 metres from a post box.

14.22. Third, additional data can be introduced on human beings as inhabitants, learners, earners etc., and so still further derived data series can be calculated.

14.23. Fourth, the description of the town need not be restricted to the present but could be extended to embrace intended future developments if these were sufficiently specific and detailed.

14.24. Finally, an attempt can be made to model these interdependent activities so that something can be said about the probable consequences for traffic, shopping, schools etc. of any proposed development.

14.25. Even if it were only possible to reach the second stage in this progression, physical environmental factors could be associated with dwellings; and if it were possible to reach the third stage, the social environmental factors could be added.

14.26. The advantages of the kind of arrangement that has been described are: first, that it draws information from a comparatively wide area and does not require the division of an area into fixed neighbourhoods supposedly suitable for all purposes at all times; and, second, it does not look at housing in isolation from the many other changing influences on the environment.

D. The housing conditions of the population

14.27. The main problem here is to relate households to the dwellings in which they live with a view to judging the adequacy of the housing stock. If households, classified by size and composition, are related to dwellings, classified by size and condition, it is possible to assess the extent of crowding and the use of substandard accommodation, and to see which kinds of household are most affected by this state of affairs.

14.28. The second question here relates to tenancy: the extent of owner-occupation; the relative importance of public authorities and private landlords in the provision of rented accommodation; the extent to which rented accommodation is furnished or unfurnished.

E. Housing services and finance

14.29. In view of the importance of housing and the many possible forms of ownership and tenancy, it is desirable to have a clear picture of housing finance. Since in many countries public authorities play an important role not only in regulatory activities and slum clearance but also in the provision of low-cost housing on a large scale, it is convenient to start off from the housing accounts of public authorities. The coverage of these accounts in the SNA is described by the United Nations Statistical Office (255, p. 88, item 6.1) and the implied accounting structure is illustrated, by the case of education, in section A of chapter VI above.

14.30. It would be useful to have similar accounts for private landlords, non-profit and profit-making, and for owner-occupiers.

14.31. The relevant entries in all these accounts are brought together in consumption expenditure on housing, which shows the payments, actual or imputed, made by private households in respect of housing services. In order to measure the full cost to the community of these services, it is necessary to add the contributions made by public authorities or others through housing subsidies or otherwise.

F. Characteristic classifications

14.32. The classifications characteristic of this part of the system relate to attributes of dwelling units, forms of occupancy and types of tenure.

1. Type of dwelling

14.33. There are many types of dwelling but in most countries a limited number of these predominate and may be called conventional dwellings. Thus, for instance, in Britain few households live in tents or caves or even in shacks, barns, huts, caravans or houseboats. It is necessary to recognize the existence of these types of dwelling but not necessary to distinguish them in any detail, with the possible exception of caravans. Most households live in houses or flats (apartments) and here some further classification would be useful. For instance, a distinction could be made between detached houses, semi-detached houses (duplexes) and terrace houses; and, in the case of flats, a distinction could be made between those in blocks below a certain height, say five floors, and those in higher blocks.

14.34. Other categories useful in classifying dwellings arise from the characteristics of the structure in which they are contained. Of these perhaps the most important is age; and another is the principal material used in construction.

2. Condition and facilities

14.35. Information is not commonly available about the state of repair of dwellings unless there is a question of their fitness for habitation. In condemning a house as unfit, the authorities usually consider many other aspects of the condition of the dwelling such as stability, dampness, internal arrangement, natural lighting, ventilation and the absence of simple facilities.

14.36. The facilities to be considered are of several kinds: natural amenities as measured, for instance, by plot size; built-in facilities such as running water, electricity and gas connexions, fixed baths and lavatories, central heating, garage; and installed consumer durables such as cookers, heating appliances and refrigerators.

3. Size

14.37. This variable is usually measured in terms of the number of habitable rooms, out of which the number of bedrooms should be separately distinguished. This is a necessary measure but it suffers from the obvious defect that it conveys no information about the dimensions of the dwelling. It would be useful to have in addition a measure of total floor area.

4. Occupancy

14.38. In addition to classifying dwellings by housing criteria it is also necessary to classify them in terms of both the individuals and the households who occupy them. Classifications by occupancy match the individual and household characteristics of the occupiers with the characteristics of the dwelling in which they live.

5. Tenure

14.39. Dwellings may be owned by the occupier or may be rented from an owner in almost any sector distinguished in the SNA. Rented accommodation may be furnished or unfurnished and forms of leases vary widely. In some countries at some periods some rents are controlled by law and, where this is the case, it is desirable to distinguish controlled from uncontrolled tenancies.

14.40. Quite apart from rent control, there are arrangements in some countries for the review of rents by a tribunal at the instigation of the landlord or tenant. Though important, these arrangements are made use of in a small minority of cases and do not provide a criterion of classification.

G. Recommended series

14.41. The items of data, classifications and social indicators in respect of housing are set out in table 14.1.

14.42. As can be seen, table 14.1 is divided into three panels relating to: the housing stock, new construction, conversion and demolition; the housing conditions of the population; and housing services and finance.

14.43. The items of data in the first panel relate to the number of conventional dwelling units occupied and vacant and to the number of other dwelling units.

14.44. The items of data in the second panel relate to occupancy, that is the match between households and dwellings, and to forms of tenure.

14.45. The items of data in the third panel relate to housing services and finance.

1. Indicators connected with the housing stock, new construction etc.

14.46. The rates of growth of conventional and other dwelling units are mainly of interest if classified by characteristics of the housing stock. In this detail, they indicate the changes that are taking place in the form of the housing stock.

14.47. The ratio of conventional dwelling units to all dwelling units indicates any tendency there may be for an increased or decreased use of unconventional units.

14.48. The proportion of conventional dwelling units occupied indicates the degree of pressure on the the housing market.

14.49. The average number of habitable rooms per conventional dwelling unit indicates any changes that may be taking place in the size of dwelling units. It would also be useful to calculate this measure for new construction.

14.50. The proportions of conventional dwelling units with various facilities throw light on various aspects of the housing stock.

2. Indicators connected with the housing conditions of the population

14.51. The ratio of the growth in the number of dwelling units to the growth in the number of households provides some indication of the extent to which supply and demand are in balance. It has to be borne in mind, however, that to some extent the formation of new households may be inhibited by a shortage of dwelling units.

14.52. The ratio of the growth in the number of dwelling units to the growth in the size of the population indicates the extent to which the demand for dwelling units depends on factors other than population numbers.

Table 14.1. Housing: items of data, classifications and social indicators

Items of data	*Characteristic classifications*	*Other classifications*	*Social indicators*
	A. The housing stock, new construction, conversion and demolition		
(*a*) The housing stock			
1. Number of conventional dwelling units occupied	Type, condition and facilities, size	Institutional sector of owner, geographical area, urban or rural area	Average number of habitable rooms per conventional dwelling unit Proportions of conventional dwelling units with various facilities
2. Number of conventional dwelling units vacant	as above	as above	Proportion of conventional dwelling units occupied
3. Number of other dwelling units	as above	as above	Ratio of conventional dwelling units to all dwelling units
(*b*) Changes in the housing stock			
1. Gains of conventional dwelling units through new construction	as above	as above	Rate of growth of conventional dwelling units
2. Gains of conventional dwelling units through conversion	as above	as above	
3. Losses of conventional dwelling units through demolition and other destruction	as above	as above	
4. Losses of conventional dwelling units through conversion	as above	as above	
5. Net gain of other dwelling units	as above	as above	Rate of growth of other dwelling units
	B. The housing conditions of the population		
(*a*) Occupancy of dwelling units			
1. Conventional dwelling units	as above (add occupancy)	as above (add size, socio-economic class, income, national or ethnic origin of household)	Ratio of growth in number of dwelling units to growth in number of households
2. Other dwelling units	as above	as above	Ratio of growth in number of dwelling units to growth in the size of the population Average number of persons per habitable room Average number of persons per 10 m² of floor area Proportion of the population living in conventional dwelling units with various facilities
(*b*) Tenure of dwelling units			
1. Conventional dwelling units	Occupancy, tenure	as above	Proportion of dwelling units occupied by their owners Proportion of dwelling units rented from public authorities
2. Other dwelling units	Occupancy, tenure	as above	
	C. Housing services and finance		
(*a*) Revenues and expenditures arising in the provision of housing services			
1. Money values set out in the accounting form outlined in the SNA		Institutional sector, kind of economic transaction, geographical area, urban or rural area	Consumption expenditure on housing services at constant prices
(*b*) Personal expenditure on housing services			
1. Consumption expenditure	Tenure	Geographical area, urban or rural area, size, socio-economic class, income, national or ethnic origin of household	Ratio of personal consumption expenditure on housing services to total personal consumption expenditure Ratio of personal consumption expenditure on housing services to total cost of providing these services
2. Price index-number of housing services			

14.53. The average number of persons per habitable room and per 10 m^2 of floor area are indicators of housing standards in terms of space.

14.54. The proportion of the population living in conventional dwelling units with various facilities indicates the extent to which the gradual spread of these facilities affects the population.

14.55. The proportion of dwelling units occupied by their owners indicates the extent of the practice of home ownership.

14.56. The proportion of dwelling units rented from public authorities indicates the extent of the part played by these authorities in the direct provision of housing.

3. Indicators connected with housing services and finance

14.57. The consumption expenditure on housing services at constant prices provides a measure of the quantity of these services and can be compared with purely physical measures based on the housing stock.

14.58. The ratio of personal consumption expenditure on housing services to total personal consumption expenditure indicates the importance of housing in the budget of the average consumer.

14.59. The ratio of personal consumption expenditure on housing services to the total cost of providing these services indicates the extent to which the personal sector pays for the services it consumes.

XV. THE ALLOCATION OF TIME AND THE USE OF LEISURE

A. Introduction

15.1. The allocation of time has already been discussed in this report: in a preliminary way in section B of chapter III and in connexion with time accounts and models based on them in chapter VIII. The use of time as a measure will be referred to in several places below: for instance, section E.1 of chapter XVIII is concerned with hours of work.

15.2. In this chapter we shall first consider the range of intervals over which we may wish to account for the use of time: the hours of the day, the days of the week, month or year, the years of the life span.

15.3. Second, we shall consider the measurement of free time, that is time at the disposal of the individual.

15.4. Finally, we shall consider the uses to which free or leisure time can be put and the facilities and expenditures which these uses imply.

B. Accounting for time

15.5. The time units and intervals which are likely to prove useful can be classified as follows.

1. The allocation of time over the day

15.6. A knowledge of how the average individual of a particular type allocates the 24 hours of the day to different purposes and the timing and the sequence of these allocations may be useful in improving the use of time and in planning facilities which would be helpful to this end. Information of this kind can be collected by means of the form of time accounting usually referred to as time budgets.

15.7. An example is provided in Tomlinson and others (218), already referred to in chapter VIII, which is concerned with the day-to-day activities of students. There, a detailed classification of activities is given, the elements of which are grouped first into forty-eight categories and then into nine main classes. With such a detailed classification it is possible to move marginal items from one class to another and, if it is thought desirable, to suppress classes or increase their number. However, the results for the nine main classes, without adjustment, are of considerable interest as the following illustration shows.

15.8. One of the institutions studied was the polytechnic in the town of Leicester and the following estimates of the use of time were obtained in respect of 95 full-time students. The first two columns give the average allocation of the 168 hours in the week and the standard deviations around these averages, and the third column gives the percentage allocation of the total time.

Academic work	33.4 ± 9.7	19.9
Travel	15.1 ± 5.0	8.9
Shopping	1.9 ± 1.5	1.1
Domestic	9.2 ± 4.7	5.5
Eating	10.4 ± 3.1	6.2
Sleeping	61.3 ± 7.2	36.5
Sport	1.2 ± 1.9	0.7
Leisure	34.4 ± 10.0	20.5
Other	1.1 ± 2.4	0.7
TOTAL	168.0	100.0

15.9. These results do not vary greatly from the experience of various kinds of full-time student at the universities of Leicester and Reading which were also studied. They relate to a homogeneous group in the community living under uniform conditions, and yet the standard deviations are large; it is to be expected that for many other groups the standard deviations would be even larger.

15.10. The figures relate to only one aspect of the students' lives: their behaviour during a week of term time. The above allocation could not be expected to hold at other times of year.

15.11. In addition to the general picture presented in the above table, the basic data enable the total time devoted to each activity to be classified by time of day and make possible the formation of a transition matrix showing the proportion of people engaged in activity j whose next activity is k.

15.12. Daily time accounts for individuals are not the only source of information on diurnal variations. In many cases it is simpler to measure some phenomenon which is the consequence of individual allocations; indeed in a controlled system this is the only way of collecting data sufficiently quickly to exercise control. For instance, in planning the working conditions of a road system and any modifications to it that may be needed, it is necessary to study traffic densities at various points at different times of day. As a second example, in controlling a water supply system it is necessary to have a continuous record of the pressure at various points in the system. Data of these kinds can be obtained by recording and measuring the outcome of specific types of individual action without reference back to the individuals concerned.

2. The allocation of time over the week, month or year

15.13. The allocation of time over longer periods than a day is interesting in a number of connexions: for instance, the hours worked in a week or the number of working days lost in a year through sickness. Although it would be possible to collect this information from individuals, it is usually simpler to collect it from institutions, in the above cases from the employing establishment.

15.14. Just as we have diurnal variation over the day, so we have seasonal variation over the year; and it may be more important to establish the normal

seasonal pattern than to estimate the annual mean or total. This is usually done by what is essentially regression on dummy variables which enables us to say by how much the mean for each season over a period of years departs from the general mean. Although a monthly or quarterly series may fluctuate, it does not follow that there is any regular seasonal variation or, if there is, that the variation is unchanging. In addition it is desirable, as far as possible, to estimate the effect of real variables on the seasonal pattern. In Stone (198, chapter VI) it is shown how the regression on dummy variables can be set up so as to enable a choice to be made between a gradually changing seasonal adjustment, a constant adjustment and no adjustment at all. Once a decision has been made on this point, the importance of potential causal factors can be assessed by introducing them into the regression analysis orthogonalized with respect to the dummy variables.

3. The allocation of time over the life span

15.15. For some purposes we may wish to know about the allocation of time over periods longer than a year, for instance over the whole life span. Thus, as is obvious, the economically active must provide for the economically inactive as well as for themselves. Some light is thrown on this question by working out the expectation at birth of years of economic activity and years of life. According to the method proposed in Stone (201) it appears that for males in Britain in the mid-1960s the expectation was for about 45.1 years of economic activity compared with a life expectancy of 68.5 years. These estimates can be used to calculate a form of dependency ratio defined as the expected number of years in non-economic activities divided by the expected number in economic activity. In this case the ratio is $23.4/45.1 = 0.54$. The dependency ratio, calculated in the normal way as the ratio of the population under 15 and over 64 to the population aged 15-64, works out to 0.55. The two estimates are not truly comparable but it is to be expected that the second one would be the higher; partly because it includes women, who are longer lived than men, and partly because the British population was not stationary but growing slowly.

15.16. Other examples of this type of time allocation can readily be given. There is a general interest in dividing life expectancies between years of healthy and unhealthy life. In the sequence of delinquency it would be interesting to relate the expected years of detention to personal and environmental factors including the number of crimes already committed.

4. Time: a quantity or a price?

15.17. Using the words quantity and price in their economic connotation, it may seem natural to regard time as a quantity. For instance, in labour statistics man-hours worked can be regarded as a refinement of the concept of men at work since it adds the dimension of time to that of numbers at work. If we look at the matter from this point of view, the introduction of different numbers of hours worked into labour-force statistics requires that each category of worker be classified by ranges of the average number of hours worked. Each category will then be homogeneous not only with respect to type of worker but also with respect to duration of work.

15.18. However, as we can see from the argument developed in section C.5 of chapter VII above, it is perhaps more convenient to regard man-hours as a price. If accounts are kept in time rather than in money hours worked per man take the place of earnings per man and man-hours worked can be seen as a value rather than a quantity.

C. The measurement of free time

15.19. The measurement of free time presupposes the collection of time budgets; other sources only provide information on a limited range of activities, such as learning and earning, which restrict the amount of free time. The first step is to classify activities (all of which require time) and then to select those which can be said to use free time. Evidently this cannot be done solely by reference to the activity itself; for intance, for a professional musician or music student instrumental practice represents work whereas for an amateur it should be regarded as a leisure activity.

15.20. It is also clear that the allocation of time is likely to vary as between weekdays and weekends, as between winter and summer and as between working weeks and holiday weeks. It is desirable therefore to distinguish, as in the study of leisure in Sillitoe (189), between these different periods.

D. Leisure activities

15.21. Leisure activities vary so much that it is difficult to arrange them in an orderly way, any order being to a large extent arbitrary. In what follows a distinction will first be made between holidays and other leisure activities and the latter will then be divided between the categories cultural, sporting and other.

1. Holidays

15.22. The term holiday is here taken to imply a certain minimal period of absence from home. With the increase in the number of employees receiving paid leave and with the increase in the length of this leave, the number of holidays has increased in recent decades. Putting the minimal period at four consecutive nights, it would appear from the United Kingdom Central Statistical Office (226, No. 3, table 61) that the number of holidays taken in Britain by British residents increased from 25 million in 1951 to 34 million in 1971; and, further, that in the later year British residents paid over 6 million holiday visits abroad.

15.23. Holidays in this sense imply a demand for many goods and services and, in particular, for transport, hotel and restaurant services. They involve comparatively large personal expenditures and also, in many cases, the purchase of special equipment such as caravans.

2. Cultural activities

15.24. These activities may take the form of visits to concerts, theatres, lectures, museums and the like or of reading, music making and so on privately. In addition, part of the time spent in listening to radio and television programmes comes under this head.

15.25. This group of activities requires such facilities as halls, theatres, museums and libraries.

3. Sporting activities

15.26. Sporting activities can be taken part in either as a participant or as a spectator. Most of them require facilities such as playing fields, race tracks, stadia and swimming pools. As might be expected, and as is borne out in Sillitoe (189, tables 9 and 10), physical recreation in the form of participation in sporting activities is particularly important among the young and the single. On marriage and in middle age its place tends to be taken in Britain by gardening and social activities and, in the case of women, knitting.

15.27. Another group of sports, hunting, shooting and fishing, involve in various degrees personal expenditure on equipment, licences and participation fees.

4. Other leisure activities

15.28. This wide range of activities can only be exemplified: walks and excursions, gardening, crafts and hobbies, social activities, watching television. The main facilities needed are land, for gardens and parks, and easy access to open spaces and the countryside. Apart from motor cars, which have uses in connexion with many forms of leisure activity, the most important piece of personal equipment is, in Britain at any rate, the television set. According to the United Kingdom Central Statistical Office (226, No. 3, table 28) there were 16.6 million television licences in 1972 (compared with 16.9 million private households in 1966) and, in the same year, the average weekly hours of viewing by all persons aged 5 and over was 18.9 in a winter month and 15.3 a summer month.

E. Facilities and personal expenditures

15.29. The brief survey of leisure activities in the preceding section suggests that it might be useful to collect the following kinds of information.

1. Land use

15.30. Land use surveys could provide information relevant to leisure activities in a number of ways.

15.31. First, there is the question of open spaces, public or private, within the limits of a town or built-up area or within stated distances of these limits. It would also be useful to know the length of sea beaches or mountain areas within stated distances of these limits.

15.32. Second, there is the land (gardens, allotments and so on) attached to dwellings and its relationship to the number of people who live in the dwellings.

15.33. Third, there is the space devoted to various sports facilities, public and private.

15.34. Finally, there is the space devoted to places of culture and entertainment such as concert halls, theatres, picture galleries, museums and libraries. These data might not prove very informative and should be supplemented by other measures of capacity such as seating capacity, number of performances per day, hours of opening, number of books stocked, etc.

2. Clubs and social organizations

15.35. Many leisure activities centre round clubs and similar social organizations: sports clubs, bridge clubs, musical, acting and operatic groups, debating societies and the like. It would be interesting to have information about these arrangements which certainly vary greatly from one town to another. But it would probably not be easy to collect this information since the organizations are, for the most part, small, numerous and changing. It could be argued that communities get the organizations of this kind that they are willing to promote and support; but then it would be interesting to know why some communities get so many and others so few. It is probably more a matter of education and youth than of anything else.

3. The transport network and transport facilities

15.36. It is important not only that facilities should exist but also that there should be adequate means of reaching them. Accordingly, it would be useful to have information on the transport system, mainly paths, road and railways, about the relevant public transport and about average travel times under typical conditions. Private means of transport are also important but they will be considered in the next subsection.

4. Major consumer durables

15.37. It would be useful to have information about the stock of major consumer durables connected with leisure: in particular, motor vehicles, caravans, cycles, boats, radio and television receivers. It would not be difficult to extend this list by including record players, photographic and sports equipment and much else.

5. Consumers' expenditure connected with leisure

15.38. Apart from expenditure on major durables, many other items of consumers' expenditure may be connected with leisure activities. Expenditure on admissions to entertainments is a clear case; and expenditures on books, newspapers and magazines or on photographic film might seem fairly clear cases, but even here it is not difficult to envisage other uses. With many other expenditures the position is much more difficult to sort out, as in the case of casual and sports-wear in relation to clothing in general, and still more in the case of holiday expenditure in relation to consumers' expenditure in general. Thus while it may be possible to pick out certain items of expenditure as likely to be mainly connected with leisure, it is difficult to see how more could be done without a special inquiry which, at best, could resolve only some of the problems.

F. Characteristic classifications

15.39. The classifications characteristic of this part of the system relate to the ways in which time can be spent, the typical period that is being considered, leisure activities and facilities available for these activities.

1. The use of time

15.40. As has been suggested, leisure time can best be measured by following the practice of time-budget studies. The use of time is divided into a large number of elements which can then be combined into categories and classes, one of which can be identified

with free or leisure time. This method does not solve all problems; there are many questions to which no answer will be attempted in this report. For instance: is a 15-minute tea-break in a factory an example of leisure time; and to what extent is the time spent at a dinner party a use of leisure time as opposed to eating time?

2. Typical periods

15.41. Any study of the use of time must distinguish between typical periods in which time is put to very different uses. Thus weekdays should be distinguished from weekends, summer should be distinguished from winter and holiday periods should be distinguished from working periods.

3. Leisure activities

15.42. In every community there is a great variety of leisure activities. There are those which involve individuals, such as reading, those that involve the family and friends, such as weekend picnics and excursions, and those that involve wider groups, such as team games. The best approach here would seem to be the one adopted in time-budget studies: namely, first to enumerate leisure activities in as much detail as possible and then to group these elements into categories and classes. The coarse grouping suggested in section D above consisted of first separating out holidays and then dividing the remaining leisure activities into cultural, sporting and other.

4. Facilities and equipment

15.43. What has just been said about leisure activities can be applied to the facilities and equipment needed to carry them out, except that in this case there seems little to be gained from aggregation even if an acceptable weighting system could be devised.

15.44. The classification of equipment and other goods and services identifiably connected with leisure is not characteristic of this part of the system but is to be found in the SNA (255, table 6.1, especially under headings 6, 7 and 8).

G. Recommended series

15.45. The items of data, classifications and social indicators in respect of free time and leisure activities are set out in table 15.1.

Table 15.1. The allocation of time and the use of leisure: items of data, classifications and social indicators

Items of data	*Characteristic classifications*	*Other classifications*	*Social indicators*
	A. The use of time and its allocation to leisure activities		
(*a*) The use of time			
1. Allocation of time by individuals to various uses including free time	Use of time, typical period	Age, sex, geographical area, urban or rural area, socio-economic class, income, ethnic or national origin	Proportion of total time in the aggregate and in different typical periods and intervals devoted to different uses including free time
(*b*) The use of free time and leisure activities			
1. The allocation of free time by individuals to various leisure activities	Leisure activity, typical period	as above	Proportion of free time devoted to different leisure activities in the aggregate and in different typical periods
2. Number of individuals granted paid leave in a year		as above	Proportion of the economically active granted paid leave
3. Number of weeks of paid leave granted		as above	
4. Number of individuals taking holidays in a year		as above	
5. Number of holidays taken		as above	Ratio of holidays taken to the population
	B. Facilities for leisure		
(*a*) Facilities available			
1. Number and capacity of concert halls, theatres and similar places of culture and entertainment	Leisure activity, type of facility	Geographical area, urban or rural area	Ratios of the capacity of various facilities to the population
2. Number and size or capacity of museums, picture galleries, libraries and the like	as above	as above	
3. Number and size or capacity of playing fields, stadia, swimming pools and the like	as above	as above	
4. Number and membership of clubs and societies of various kinds	as above	as above	
5. Area of parks and open spaces	as above	as above	

Table 15.1. The allocation of time and the use of leisure: items of data, classifications and social indicators (*continued*)

Items of data	*Characteristic classifications*	*Other classifications*	*Social indicators*
		B. Facilities for leisure (continued)	
6. Number of private cars, caravans, boats and other transport equipment	as above as far as applicable	Geographical area, urban or rural area; socio-economic class, income, national or ethnic origin of household	Ratios of the stock of various major durables to households
7. Number of radio licences and television licences		as above	
		C. Expenditures for leisure	
(*a*) Private expenditures			
1. Expenditure on individual major durables used in leisure activities		Type of durable; geographical area, urban or rural area, socio-economic class, income, national or ethnic origin of household	Proportion of private consumption expenditure devoted to identifiable goods and services used in leisure activities
2. Expenditure on identifiable non-durables such as admission tickets, gramophone records, books, newspapers and magazines, sports equipment		as above (omit type of durable; add type of non-durable)	
3. Subscriptions to clubs, societies, sporting syndicates and the like		as above (omit type of non-durable; add type of subscription)	
(*b*) Public expenditures			
1. Running costs of leisure facilities such as museums and opera houses	Leisure activity, type of facility	Geographical area, urban or rural area	
2. Capital expenditure on leisure facilities	as above	as above	
3. Transfers in support of leisure activities	Leisure activity	as above	

15.46. As can be seen, table 15.1 is divided into three panels relating to: the use of time and its allocation to leisure activities; facilities for leisure; and expenditures for leisure.

15.47. The items of data in the first panel relate to the use of time in general and to the use of free time, the extent of paid leave and the number of holidays taken.

15.48. The items of data in the second panel relate to facilities available for leisure activities including information on clubs and societies and on the stocks of major consumer durables useful in connexion with leisure.

15.49. The items of data in the third panel relate to private and public expenditures connected with leisure.

1. Indicators connected with the use of time and its allocation to leisure activities

15.50. The first indicator is intended to show how time is allocated to different uses in the aggregate and in different typical periods and over different intervals.

15.51. The second indicator is intended to show how free time is distributed over different leisure activities.

15.52. The proportion of the economically active granted paid leave provides a measure of the main basis for holiday activities. The average length of paid leave is mentioned as an indicator connected with conditions of work in paragraph 18.91 below.

15.53. The ratio of holidays taken to population indicates the changes that are taking place in the practice of taking holidays away from home.

2. Indicators connected with facilities for leisure

15.54. The ratios of the capacity of various facilities to the population and the stocks of various major consumer durables to households indicate the availability of capital equipment needed for certain kinds of leisure activities.

3. Indicators connected with expenditure for leisure

15.55. This indicator provides some information on the importance in the consumers' budget of expenditures devoted wholly or mainly to leisure purposes.

XVI. SOCIAL SECURITY AND WELFARE SERVICES

A. Introduction

16.1. Social security and welfare services were discussed in broad terms in section M of chapter II above; and the benefits accruing to individuals and households from these services formed part of the subject matter of chapter XIII. Here, these questions are treated from the viewpoint of the arrangements and services available, the numbers eligible for and in receipt of benefits and services and the accounts of the institutions providing them.

16.2. In the following section the activities included under the heading of social security and welfare services are set out on the lines recommended in the SNA. From the viewpoint of international standardization, public activities are easier to deal with than private activities, for the reasons already given in chapter II. In the usual table, set out in section 16.23 below, most of the entries relate to public activities but something is said about both kinds in the course of this chapter.

16.3. The remainder of the chapter deals with characteristic classifications and with recommended series and social indicators.

B. Boundaries: social security and welfare services in the SNA

16.4. Welfare services provided by private nonprofit institutions are described in SNA (255, p. 89) as follows:

> "Child welfare services and institutions; homes for, and care of, aged, disabled, blind, etc.; family welfare agencies and services; shelters; travellers' aid and legal aid societies; Red Cross and similar organizations; agencies for the collection and allocation of contributions for charity and other welfare services."

It is also said in a footnote on the same page that

> "It is desirable to compile supplementary data on the expenditure and receipts of these bodies in respect of food, beverages and tobacco, clothing and medicines and pharmaceuticals for individual use."

16.5. Social security and welfare services provided by public authorities are described in SNA (255, p. 88) as follows:

> "*Social security and assistance*
>
> "Administration of payments and funds for unemployment benefits, old-age pensions, accident, injury, sickness and other benefits to compensate for loss of income; family, guardians' and widows' allowances; public relief, war veterans' benefits and the like.
>
> "*Welfare services*
>
> "Child welfare services and institutions; homes for, and care of, the aged, disabled, blind, etc.; family welfare agencies and services; and other special welfare institutions and organizations."

There is a foot-note attached to welfare services similar to that just given in respect of private institutions.

16.6. In dealing with the accounts of institutions and organizations of these kinds, reference should be made to the discussion, using education as an example, in section A of chapter VI above.

C. Private welfare services

16.7. Private services concerned with the welfare of children include orphanages, adoption societies, child protection societies and pre-school play groups. Individuals help in many other ways, as in providing homes for children in connexion with child-care schemes organized by local authorities.

16.8. Other services are designed mainly to assist adults in one way or another. In the first place, there are the pension and sick-pay schemes organized by employers, which have grown greatly in importance in recent years. Further examples are family planning associations, citizens' advice bureaux, voluntary service organizations, prisoners' aid societies, institutions devoted to relieving hunger or homelessness and many others.

16.9. Services intended to help the aged include almshouses, old peoples' homes and societies devoted to rendering personal services to old people.

16.10. The kind of institutions mentioned are, in many countries, numerous and vary greatly in size and organization. There can be no doubt about their importance but some of them pose problems to the statistician.

D. Social security and public welfare services

16.11. It is convenient to divide this group of services into social security, public assistance and other. There are considerable differences among countries in institutional arrangements but the statistical difficulties are not as great as with private welfare services.

16.12. Broadly speaking, social security schemes provide benefits or pensions to individuals in such circumstances as: sickness, maternity, injury or death; unemployment; retirement and old age. In addition, special provision may be made for certain groups in society such as war veterans.

16.13. In spite of the existence of arrangements for social security, a certain proportion of the population is likely to be found at any time in need of financial assistance to enable them to maintain what is regarded as a minimum standard of living. As a result, schemes of public assistance have been introduced in many countries in which the grant made is, in part at least, dependent on the circumstances, which are kept under regular review, of the individual or family.

16.14. In addition to financial assistance, many countries organize a range of welfare services which provide benefits in kind. These services are largely oper-

ated by local authorities and tend to concentrate on the needs of the young and the old. For instance, in England and Wales at the end of 1971 it can be seen from the United Kingdom Central Statistical Office (226, No. 3, table 78) that some 87,000 children, or six per thousand of the population under 18, were in the care of local authorities; and of these 9,000 were in remand homes or approved schools. As another example, residential and other services, such as home nursing, domestic help and prepared meals, are provided, the beneficiaries in these cases being mainly the elderly and the handicapped.

E. Characteristic classifications

16.15. The classifications characteristic of this part of the system relate to type of social security provision, type of public assistance, form of welfare service, reason for the assistance or service, duration of receipt and size of benefit.

1. Type of social security provision

16.16. The aim is to distinguish between different forms of provision, such as unemployment benefit, sickness benefit and pensions.

2. Type of public assistance

16.17. Here, again, it is necessary to distinguish between different types of assistance.

3. Type of welfare service

16.18. Many welfare services are comparatively complicated. Thus, one such service relates to the care of children; but this can be arranged in a variety of ways which it may be desirable to keep separate.

4. Reason for assistance or service

16.19. There are usually a great number of possible reasons why a service should be needed in any particular instance. As an example, a child may be taken into care because it has been abandoned, because its parents are ill, incapacitated or homeless, because of his own bad behaviour or for a host of other reasons. These different reasons may point to a need for different types of accommodation: in some cases the stay in care may be expected to be short, in others long; and in a number of cases the child's own delinquent behaviour may require special arrangements.

5. Duration of receipt

16.20. Although for some kinds of benefit (such as pensions) the duration of receipt may extend over many years, for others (such as unemployment and sickness benefits) it is more likely to extend over days, weeks or months. In the terminology used earlier in this report, for instance in section B of Chapter IX, we are dealing in this part of the system more with visitors than with migrants and it is important to know the length of their visit. It is for the same reason that the data series in table 16.1 below concentrate exclusively on stocks.

16.21. There are two concepts of duration that may be useful: one relates to duration in the relevant year; and the other relates to duration up to the end of the relevant year. On the whole it seems likely that the second concept is the more useful one.

6. Size of benefit

16.22. For some purposes it may be helpful to classify recipients in terms of the size of the benefit they receive. In this context it is the amount of benefit received in the year that is needed since this information helps to link the income aggregates discussed in the preceding chapter.

F. Recommended series

16.23. The items of data, classifications and social indicators in respect of social security and welfare services are set out in table 16.1.

16.24. As can be seen, table 16.1 is divided into two panels relating to: the number eligible for and in receipt of benefits; and revenues and expenditures connected with social security and welfare services.

16.25. The items of data in the first panel relate to the number of individuals eligible for and in receipt of benefit under different provisions for social security, the number of families and no-family households in receipt of assistance and the number of families or individuals in receipt of other forms of welfare service.

16.26. The items of data in the second panel relate to the revenues and expenditures arising in the provision of social security and welfare services and to standard rates of benefit.

1. Indicators connected with the number eligible for and in receipt of benefit

16.27. The proportion of the relevant group eligible under various social security provisions indicates the coverage of these provisions: for instance, what proportion of the economically active can claim unemployment benefit if they are out of work.

16.28. The proportion of those eligible who are in receipt of benefit indicates the use made of social security provisions. It is to be expected that this proportion will fluctuate considerably in the case of provisions for the relief of unemployment but will fluctuate little in the case of pension schemes.

16.29. The proportion of the relevant group in receipt of benefit indicates the extent of the use of public assistance and other welfare services: for instance, what proportion of families of different kinds claim public assistance; what proportion of the population under 18 years of age are in the care of local authorities.

16.30. The number of inmates in welfare institutions as a proportion of the relevant group indicates the extent to which welfare needs are met by the establishment of institutional households rather than by means which leave the individual with greater privacy and freedom of action while ensuring that his daily needs which he cannot meet for himself are met by others.

2. Indicators connected with revenues and expenditures

16.31. The various benefits received as a proportion of available income indicates the contribution made by this group of services to the incomes of different kinds of family.

16.32. The average size of benefits received at constant consumer prices is intended to indicate how far these services are used to meet small needs or large needs.

16.33. Standard benefits at constant consumer prices indicate the extent to which the scales of benefit of the different services succeed in keeping pace with the cost of living.

Table 16.1. Social security and welfare services: items of data, classifications and social indicators

Items of data	*Characteristic classifications*	*Other classifications*	*Social indicators*
	A. Number eligible for and in receipt of benefit		
(*a*) Social security provisions			
1. Number of individuals eligible	Type of provision	Age, sex, latest industrial attachment	Proportion of relevant group eligible
2. Number of individuals in receipt of benefit	as above (add duration of receipt, size of benefit)	as above	Proportion of eligible in receipt of benefit Proportion of relevant group in receipt of benefit Inmates in welfare institutions as a proportion of relevant group
(*b*) Public assistance			
1. Number of families and no-family households in receipt of assistance	Type of assistance, reason for assistance, duration of receipt, size of benefit	Geographical area, urban or rural area, size and type of family (no-family household), age of head, national or ethnic origin	
(*c*) Other welfare services			
1. Number of families or individuals in receipt of service	Type of service, reason for service, duration of receipt, size of benefit, type of institutional arrangement	as above (add individual; omit no-family household)	
2. Number of individuals in welfare institutions	Type of welfare institution	For individuals: age, sex, national or ethnic origin For institutions: institutional sector	
	B. Revenues and expenditures connected with social security and welfare services		
(*a*) Revenues and expenditures arising in the provision of social security and welfare services			
1. Money values set out in the accounting form outlined in the SNA	Type of provision, assistance or service	For services: institutional sector, kind of economic transaction For benefits: geographical area, urban or rural area, size and type of family (no-family household, individual), age of head, national or ethnic origin, socio-economic class of recipient	Benefits as a proportion of available income Average size of benefits received at constant consumer prices
2. Standard rates of benefits	as above	as above	Standard benefits at constant consumer prices

XVII. LEARNING ACTIVITIES AND EDUCATIONAL SERVICES

A. Introduction

17.1. This chapter begins with an attempt to define learning activities and discusses the problem of drawing a boundary around those that are to be included for purposes of statistical reporting, full-time formal education being distinguished from various kinds of part-time and informal education.

17.2. The aspects of education considered in this chapter can be divided into three main groups: stocks and flows of students; inputs (current and capital, primary and intermediate) and outputs of educational services; and the educational attainments of the population as a whole. In considering inputs into and outputs from educational services it will be helpful to refer to the treatment of service activities in the SNA described in section A of chapter VI above.

17.3. The remainder of the chapter deals with characteristic classifications and with recommended series and social indicators.

B. Educational boundaries

17.4. The definition of learning activities raises the same kind of problem as does the definition of productive activities in the economic accounts. In the economic case it is helpful to think of a boundary, the production boundary, drawn round those activities which constitute production as measured in the economic accounts. In a similar way, it is helpful to think of an educational boundary drawn round those activities which we consider should be recorded under the heading of education.

17.5. The core of the concept of education is systematic instruction leading to the acquisition of a specific body of knowledge or a specific skill. This, presumably, is what is generally meant by formal education. Formal education is usually linked with some kind of formal qualification: a school-leaving certificate, a diploma in domestic science, a university degree. Whether the individuals who follow the courses actually take the final tests and obtain the appropriate qualifications is irrelevant, however: anybody who follows a regular course is receiving formal education and therefore has a place inside the educational boundary. By contrast, the acquisition of knowledge by irregular and sporadic means should be placed outside the boundary.

17.6. By far the greater part of formal education takes place in educational establishments: schools, technical colleges, universities and so on. Schools are of various kinds and some kinds are much better documented than others. In most countries, the great majority are maintained by the central government or by local authorities, and these are usually fairly well documented. In addition there is often a group of private schools which are partly subsidized by the state and which accept some degree of state inspection; these are often educationally important and have an interest in providing information. Beyond these there is likely to be a group of unrecognized schools, of varying educational importance, about which relatively little is known. All such establishments, which provide full-time schooling, should be placed inside the educational boundary, however difficult it may be to do so.

17.7. Establishments of further education are even more differentiated and pose even greater practical problems. Again, there are the straightforward cases, like the great universities. But there is also a wide range of institutions which are not characterized by a common purpose or mode of operation: some are specialized in a set of narrow vocational disciplines and raise the question of educational content; others operate in terms of very short courses, which complicates the recording of inflows and outflows in annual accounts. Still, all establishments of further education, including this difficult fringe, belong inside the boundary.

17.8. A complement to formal education which should not be ignored is private tuition by qualified teachers. Not only is it a common remedy for bad performance at school, it is also a widespread means of learning subjects which at school are either not taught at all or cannot be fitted into the time-table of a particular curriculum. Two obvious examples are private language lessons and private music lessons; indeed, the latter are the foundation of many musical careers. Although recording private tuition, even approximately, may be impossible with the information available at present, there is little doubt that its contribution to formal education is quite substantial, especially at the primary and secondary levels.

17.9. Much further education of a professional nature does not take place in establishments of formal education either. A professional association, say of engineers or accountants, may provide a curriculum and a system of regular examinations but little or none of the necessary teaching; while preparing for such examinations, the students will usually be earning their living and will depend largely on spare-time reading, evening classes and correspondence courses to gain the necessary knowledge. This complex of activities is also extremely hard to bring into any regular statistical reporting system, yet in many countries it is the means by which most members of some important professions obtain their qualifications.

17.10. So far we have considered activities that *prima facie* lie inside the educational boundary even if some of them are very difficult to measure. Let us now turn to undoubtedly educational activities that lie *prima facie* outside the boundary. In the first place there is the analogue of household and amateur activities in the economic case: the parent who teaches the children to read and write before they go to school and helps them with their homework when they are at school.

17.11. In the second place, quite a lot is done in the field of technical and professional education by institutions which are not normally associated with education at all. Apart from training on the job, which may contribute more than anything else to many people's knowledge of particular skills, cases can frequently be

found where firms or government departments organize specialist courses either for their own members or for a wider public. Thus a gas company may set out at a particular time to teach its employees about the technicalities of converting equipment from town gas to natural gas; a government department may provide refresher courses in economics for administrative civil servants; a central statistical office may run seminars on national income statistics for the benefit alike of official statisticians and of business economists; a firm of consultants may organize conferences on systems analysis and operational research with the aim of widening the understanding of new techniques whose applications they are trying to sell.

17.12. We can conclude from this brief survey of the subject that defining educational activities is a complicated matter which illustrates, sometimes in an extreme form, the difficulties of defining productive activity in general. In setting up a recording system, there can be little doubt that a start should be made by drawing the educational boundary fairly tight so as to include only institutions of formal education. At the same time, it is desirable to keep in mind the less regular means by which knowledge can be acquired and try to work them gradually into the system, at least at the theoretical level. Although the wish to record these less regular means at the present time may be little more than the expression of a pious hope, they are certainly important in some fields and may well become more important in the future, especially in view of the increasing rate of obsolescence of technical knowledge and the consequent return to generalism in early education. The standard classification prepared by UNESCO is described in section F below.

C. Stocks and flows of students

17.13. A framework for relating human stocks and flows was described and illustrated numerically in secton A of chapter III above and set out in a general symbolic form in section B of chapter VII. The amount of detail presented depends on the classifications used, as set out in section F below. All that need be added here is that the student population should be set within the framework of the population as a whole so that consistency is assured between the two bodies of statistics, demographic and educational. The main implications of this requirement are that we should record the population, from age 0 on, who have not yet gone to school and also the population who, though they have passed through the educational system, no longer form part of it.

D. Inputs and outputs of educational services

17.14. The information contained in this area of the subsystem is expressed partly in terms of money (mainly accounting data), partly in terms of money at constant prices (index-numbers formed by combining weights obtained from accounts with physical indicators mainly relating to inputs) and partly in terms of number or other physical unit, as in the case of teachers, buildings and equipment.

E. The educational attainments of the population

17.15. In this part of the subsystem we turn away from the current operation of the educational system and examine the present outcome of its operation in the past. We are thus concerned with such matters as literacy, length of schooling and educational qualifications embodied in the population as a whole and, in particular, that part of it which is no longer a student in the educational system.

F. Characteristic classifications

17.16. It is convenient to start with a brief description of the standard classification (ISCED) set out in UNESCO (266).

1. The International Standard Classification of Education

17.17. This classification is designed to enable comparable data to be assembled on various aspects of education such as those referred to in the preceding three sections. The boundary defining what is to be reckoned as "education" is set so as to include not only schools, universities and the like but also a wide range of programmes of organized education and training provided in other institutions. Thus activities such as individual instruction in languages, music and the like, study by individuals on their own initiative and on-the-job training are not intended to be covered unless they form part of a systematized educational activity.

17.18. ISCED is essentially a classification of education by type of programme defined in terms of level and subject matter, the latter being divided, first, into broad areas and, second, into specific subjects. These criteria can be described as follows:

(*a*) Educational level. The aim here is to trace progression through the educational system in terms of the elementary or advanced nature of the work. Thus we begin with work of the kind done at nursery schools and move on to the first level which corresponds broadly to elementary education. This is followed by the second level which corresponds broadly to secondary education. The second level is divided into two stages: a lower stage and a higher stage. The third, and final level is again subdivided and distinguishes work not leading to an academic degree or the equivalent, work leading to a first degree and work leading to a post-graduate degree. Provision is also made for education not definable by level.

(*b*) Field of study. The secondary criterion of classification is concerned with some twenty-four broad areas of study and is largely described in terms of programmes. Thus in the first division of the third stage we find fine arts programmes, natural science programmes and so on.

(*c*) Programmes. The tertiary criterion of classification is concerned with a subdivision of the broad fields of study into specific subject programmes. Thus history, literature, languages etc. might be distinguished within the general heading of humanities; physics, chemistry, biology etc. might be distinguished within the general heading of natural science.

17.19. Since in some establishments it is possible to do work appropriate to more than one level, field or programme, ISCED calls for a departmental division within establishments, a matter which may give rise to difficulties. Thus the first criterion raises the question of establishments and the second and third the question of subject streams.

17.20. Let us look more closely at some of the problems and purposes of classifying establishments and subject streams and then go on to consider classifications not introduced into ISCED.

2. Establishments

17.21. Since it was not the intention in designing ISCED that the type of education to be included in a category should depend on the type of institution providing it, a classification of educational establishments is not given in UNESCO (266). However, sufficient is said there to suggest that the range of establishments contemplated consists largely of those devoted primarily to education. Most of these are not difficult to identify, but in all countries there is likely to be a number of border-line cases; there may be doubt about the educational character of their activities or these activities may be insufficiently formalized to allow being recorded separately.

17.22. One of the purposes of tracing the career of students into, through and out of the educational system, although not necessarily the most important, is to determine the options open to a student at each stage of his career and to measure the proportions in which these options are taken up by any particular group of students. For instance, we might find that the options open to 16-year-old boys at the second stage of secondary school were: (*a*) to remain at school; (*b*) to enter an institution of further education; or (*c*) to take a job. And we might discover from our demographic accounts that the proportions in which this particular group took up these options were, for one type of school 0.82, 0.01 and 0.17 respectively, while for another type of school they were 0.57, 0.14 and 0.29. These proportions depend not only on age, sex and region but also, in a marked way, on the type of school attended. This emphasizes the value of using the classification according to field of study in addition to educational level: distinguishing those areas that provide various kinds of vocational training from those that provide a general education; and within the latter category, those with modest academic aims from those with high academic aims. These distinctions do not apply to nursery and primary schools, which offer in most countries a pretty uniform curriculum, but they do apply to secondary education.

17.23. In the case of institutions of further education, it will be easy to classify those with clear-cut aims and operating at a uniform level, such as teacher training colleges, academies of music and art, military schools, colleges of advanced technology and universities. But it will not be easy to classify the numerous establishments with multiple aims. This group is likely to be concerned with intermediate forms of technical education and may in many ways overlap with the activities of other types of educational establishment. In England, for example, the so-called technical colleges (as opposed to colleges of advanced technology) may combine work at three different levels: (*a*) courses leading to a wide range of technical certificates and diplomas; (*b*) courses leading to university entrance, corresponding to those held in the senior forms of secondary schools; and (*c*) courses leading to an "external" university degree. The best way of dealing with such establishments is, wherever possible, to subdivide their activities by level of education and field of study.

3. Areas and subjects of study

17.24. Programme of study and in many cases, field of study, stand to educational establishments in much the same relationship as commodity groups stand to industries in the economic accounts. Just as commodity groups are defined as the principal products of industries, so can subject streams be defined as the principal products of educational establishments. There is not necessarily a one-to-one correspondence between subject and establishment, any more than in economics there is a one-to-one correspondence between commodities and industries; many industries have more than one principal product and many make a number of subsidiary products which are characteristic of other industries.

17.25. Similarly, some educational establishments go in for a single subject or complex of subjects: musical academies provide nothing but a musical training, primary schools provide nothing but primary education. From the secondary level up, many establishments offer a number of specialized parallel areas and subjects of study and could thus be said to have several principal products. As people get older, specialization tends to become narrower and at this stage it is desirable to subdivide the fields of study into component subjects.

17.26. To sum up. At the present stage of the development of educational statistics, institutional categories may constitute the most practical basis for classification from a data-collecting point of view and, if carefully defined, may also give some information on the quality of education. But it seems obvious that from a purely educational point of view a better classification is by field and subject of study as provided in ISCED. This classification also has considerable practical advantages: it would offer ready pigeonholes for private tuition when this type of education becomes statistically manageable; and, above all, it would make international comparisons much more significant.

4. Grades

17.27. Many school systems make use of a sequence of uniform grades: a pupil usually enters the school system in the first grade and works his way up, receiving at each stage some kind of evaluation, success in which is the passport to a higher grade. In recording progress through educational systems that do not have a sequence of grades, the activity "at school" is likely to be set out in terms of an arrangement whereby ages, but not grades, are recorded, age providing the most convenient link between the various subsystems contained in a general system of demographic accounts. But if we were exclusively interested in the flows of people within the educational subsystem, the activity "at school" could equally well be subdivided by grades. Actually, even if all children were to start school at the same age, it would not be long before differential performance led to a considerable spread of ages in the middle and higher grades. But this would not matter. When it comes to modelling the educational system, similar models, based on transition proportions, can be applied to a grade classification as to an age classification, as can be seen by comparing the analysis of the educational system of Norway given in Thonstad (215) with the other educational models exemplified in part Three below.

17.28. Of course, it would be possible to record grades as well as ages, grades representing a sub-clas-

sification of levels of education or subject streams, and it would be very useful to introduce both classifications for countries where entries into and exits from a particular grade are significant for future educational development. Where grades have little or no importance, that is in a very small number of developed countries, it may be better not to introduce grade and, instead, to make a distinction at the appropriate ages between the pupils engaged in advanced work and those not so engaged, that is a distinction by level of education.

17.29. Whether one is dealing with ages or grades, it is necessary to consider how far it is desirable to record separately each individual age or grade and how far it is permissible to group them. There are two aspects to this question: how far are we interested in individual ages or grades; and how far is the stability of the transition proportions likely to be affected by grouping. As regards the first aspect, it seems clear that although our interest increases with age or grade, there is still a great interest in the earlier stages of compulsory schooling in developing countries. As regards the second aspect, the answer must depend on the stability of the birth rate, the entry age and, to a lesser extent, on the stability of the rates of inward and outward migration. In a stable or exponentially growing population the weights to be applied to age-specific or grade-specific transition proportions would be constant, and therefore grouped transition proportions would be no less stable than those for individual ages or grades. If, however, there are marked fluctuations in the birth or migration rates from year to year, grouped proportions will tend to be less stable than age or grade-specific ones. It is suggested that, where possible, individual ages and grades be recorded and treated separately.

5. Tests and qualifications

17.30. Apart from a knowledge of subjects studied and progress made, it is also necessary to know something about tests taken and qualifications obtained, particularly at the later stages of the educational process. It is desirable to record at least the facts of a final test passed at the end of an educational level and cycle, whether this be a leaving certificate from a secondary school or a post-graduate degree from a university.

17.31. Of course it is possible to have a system in which people are allowed to leave school without taking any final tests. In such cases, grades completed might stand for qualifications. In a country with a fixed school-leaving age, say of 15, but with no compulsory leaving test, it would at least be possible, if there were a sequence of uniform grades in the lower range of secondary school, to record that so many 15-year-olds left while in the eleventh grade, say, so many while in the tenth and so many while still in the ninth.

17.32. Alternatively, we may have no information at all about qualifications. This, again, is a situation in which recording grades might be useful. For example, if, in order to enter a cycle it is necessary to have passed a certain number of examinations, the recording of enrolment in the first grade of the cycle would enable us to see, in the absence of explicit information about qualifications, how many people had at least a minimum number of passes.

6. Full-time and part-time education

17.33. Schools usually work on a full-time basis, though in some nursery schools the working day may be of no more than two or three hours' duration and in developing countries many schools work on a shift system. In many establishments of higher education and in technical education at the second level, on the other hand, in addition to full-time students there are a variety of part-time students who work only in the evenings or on one day a week and so on. It is desirable to separate these different categories and essential to do so if the demographic and economic accounts of education are to be integrated.

7. Curricula, teaching methods, size of classes

17.34. Information on these topics is mainly of interest from a pedagogical point of view, when discussing how to adapt an educational system to handle a fast-increasing flow of pupils, how to adapt the content of education to the cultural and economic needs of the country or how to educate existing numbers more efficiently. It is not very relevant to the problem of how to integrate educational statistics into a general demographic system, and will not be discussed in this report.

8. Administrative categories

17.35. The classifications envisaged so far relate to the type of education provided and cut right across administrative categories. From a purely educational point of view it seems the best to adopt. But part of the purpose of studying transition proportions is to estimate the future inputs and costs associated with the changing pattern of education. While these economic and financial factors are probably more effectively studied in terms of an educational classification, they must also be related to an administrative classification since the sources of finance, if not the quantity and composition of the inputs themselves, may vary widely.

17.36. Any system of statistical compilation should be capable of serving many purposes but is unlikely to be equally suitable for all of them. In the present case there seems little doubt that the principal classification adopted should be on educational lines, as in ISCED, and that a transforming matrix, or classification converter, should be used to turn educational into administrative categories. Such a converter is simply a coefficient matrix with column-sums equal to unity, in which the rows relate to administrative categories and the columns relate to educational categories. If a vector whose elements are classified educationally is premultiplied by such a matrix, there results a vector whose elements are classified administratively.

G. Recommended series

17.37. The items of data, classifications and social indicators suggested in respect of learning activities and educational services are set out in table 17.1 below.

17.38. As can be seen, table 17.1 is divided into three panels relating respectively to: pupils and students, educational inputs and outputs; and the educational attainments of the population.

Table 17.1. Learning activities and educational services: items of data, classifications and social indicators

Items of data	*Characteristic classifications*	*Other classifications*	*Social indicators*
		A. Pupils and students	
(*a*) The educationally active			
1. The number of pupils and students enrolled in different branches of the educational system	Level of education, year (grade) of education, area of study, major subject of study at third level, educational qualifications obtained, part-time or full-time attendance	Age, sex, geographical area, urban or rural area, national or ethnic origin, socio-economic class	Enrolment ratios Expectation at birth of years to be spent in the educational system Ratio of average time in the school system to minimum period of compulsory school attendance Ratio of elementary to total enrolments
2. Entrants into educational activities and continuers in the same activity	as above	as above	Expectations of reaching various stages of the educational system from various initial states
3. Leavers from educational activities	as above	as above (add industry, occupation)	Average age on leaving the educational system
		B. Educational inputs and outputs	
(*a*) Inputs and outputs of educational activities			
1. Money values set out in the accounting form outlined in the SNA	as above (omit year (grade) of education and educational qualifications obtained)	For establishments: institutional sector, geographical area, urban or rural area	Ratio of educational expenditure to the GNP
2. Inputs, primary (including teachers) and intermediate, expressed in physical terms	as above	as above	Index-numbers of inputs into the educational system as a whole and into its various branches; and of the corresponding input prices
3. Input prices	as above	as above	Student-teacher ratios in different parts of the educational system
4. Differential life-time earnings	as above	For individuals: sex	Index-numbers of outputs of the educational system as a whole and its various branches and of the corresponding output prices
(*b*) Teachers			
1. Number of teachers engaged	as above (add educational qualifications of teacher)	For teachers: age, sex, national or ethnic origin For establishments: as above	
2. Gains to teaching stock	as above	as above	
3. Losses to teaching stock	as above	as above	
(*c*) Buildings and equipment			
1. Capacity of educational buildings and major facilities and equipment	as above (omit educational qualification of teacher)	For establishments: as above	
2. Net additions to capacity	as above	For establishments: as above	
		C. Educational attainments of the population	
(*a*) Educational attainments			
1. Number of illiterates		Age, sex, national or ethnic origin	Literacy rate for the population aged 10 and over
2. Numbers who left the educational system at different ages		as above	Average age on leaving the educational system
3. Numbers who completed different periods of education		as above	Average number of years of education completed
4. Numbers who left the educational system with different qualifications	Highest level of education, qualification on leaving full-time education	as above	Academic level reached at end of education

17.39. The items of data in the first panel of this table relate to the numbers in different parts of the educational system at successive dates, to movements between dates and to qualifications obtained during the school year.

17.40. The items of data in the second panel relate to accounting information, the expected return to different forms of education and various series, expressed in physical units, in respect of teachers, buildings, equipment and other inputs.

17.41. The items of data in the third panel relate to the literacy, length of schooling and educational attainments of the population.

1. Indicators connected with pupils and students

17.42. Enrolment ratios measure the proportion of the population in the relevant age-group enrolled in some branch of the educational system. There are difficulties in defining the relevant age-group, partly because a country may contain several school systems at any level with somewhat different starting ages and age ranges; and partly because, even if this is not the case, the age ranges of, say, primary and secondary education may overlap. However, these difficulties are not insuperable and UNESCO has presented (265, 1970 edition, table 2.5) a series of calculations from 1950 to the late 1960s in respect of school enrolment ratios for the first and second levels of education in 192 countries and territories. According to Stone (202) the proportion of the population of school age enrolled at primary and secondary levels in the mid-1960s is closely associated with the dollar value of the GNP per head and the proportion of the population living in urban areas. On the evidence of observations for 104 countries for which all these data are available, two thirds of the variance in the school enrolment ratio can be accounted for by these two variables.

17.43. The number of years expected at birth to be spent in the educational system in the first θ years of life provides another measure of educational penetration. This indicator can be constructed from the inverse derived from a matrix of transition proportions and is illustrated in Stone (199). There it appears that with $\theta = 20$ this expectation, in the conditions of England and Wales in 1964-1965, is for 11.5 years to be spent, on average, in full-time formal education by both boys and girls. On average, in each case, about 4.5 years are spent before joining the educational system and about 3.5 years are spent in other activities after leaving it. The additional half year is accounted for by mortality in the first 20 years of life. There would be no difficulty in reworking the calculations so that they related only to survivors. These simple measures expressed in time could also be expressed in time weighted by costs, obtained from the economic accounts of education, incurred in different parts of the educational system.

17.44. The ratio of the average time spent in the school system to the period of compulsory school attendance as an indicator would show the importance of voluntary attendance in relation to the prevailing minimum standard.

17.45. The ratio of elementary to total enrolments is designed to indicate how far an educational system concentrates on elementary instruction needed to reduce illiteracy and how far, while providing such instruction very generally, it also provides more advanced instruction on a substantial scale. It would seem convenient to define elementary education, in the UNESCO terminology, as pre-primary and primary enrolments and to include in all education secondary and tertiary enrolments as well. According to Stone (202), the ratio defined in this way is closely associated with the ratio of the illiteracy rate in the population aged 15 and over to the dollar value of the GNP per head. On the evidence of observations for 114 countries, for which all these data are available, 63 per cent of the variance in the proportion of elementary enrolments in total enrolments can be accounted for by this ratio.

17.46. The ratio of pupil-years spent per successful completion to the minimum number required indicates the extent to which the ideal performance of the system is reduced as a consequence of drop-outs and repeaters. This indicator is the input-output ratio referred to in UNESCO (267, p. 40).

17.47. The average age on leaving the educational system is intended as an indicator to measure the age up to which individuals are engaged in full-time education. It is not intended to cover individuals who after a time away from the system return to it to attend a special course, obtain a diploma, etc.

17.48. The expectation at birth and at specified other states of reaching higher stages in the educational system such as the second stage of the second level, the third level or a university is a range of indicators whose usefulness is illustrated in Stone (201) where it is shown how greatly the initial expectation of enrolment in, say, a university is influenced by success or failure at school. An analysis taking into account other influences, such as socio-economic status, is provided in Tuck (220).

2. Indicators connected with inputs and outputs

17.49. Index-numbers of inputs into the educational system as a whole and into its various branches provide the input measures of output (and associated unit costs) as they frequently appear in the national accounts.

17.50. Index-numbers of output, based on enrolments and incremental expected returns, and the corresponding prices: if information is available about the expected life-time earnings associated with different educational qualifications as in Morris and Ziderman (140), it is possible to build up index-numbers of output by weighting the numbers of students at different levels and stages by the incremental returns associated with that level or stage. In doing this, allowance must be made for the length of the stage and the proportion of students likely not to complete it. This type of measure concentrates exclusively on the economic aspect of educational output, involves assumptions (such as that differential earnings are substantially attributable to differential education) and depends on the choice of a social rate of discount.

17.51. Student-teacher ratios in different parts of the educational system provide simple indicators of one aspect of educational quality. Given information on the qualifications of teachers, an attempt could be made to express the number of teachers in terms of fully-qualified equivalents.

17.52. The proportion of teachers with minimum qualifications is intended to indicate the extent to which it has proved possible to recruit teachers with at least the minimum qualifications expected.

17.53. The expenditure on education in relation to the national budget provides an indicator of the extent to which the claims of education are recognized financially by the state in relation to other claims on state revenue.

17.54. The expenditure on education in relation to the GNP provides an indicator of the importance of education as a user of resources. Transfers connected with education, such as grants to students, should be excluded from expenditure.

3. Indicators connected with the educational attainments of the population

17.55. The literacy rate, or its more frequently used complement the illiteracy rate, indicates the extent to which the population has acquired an important, if modest, educational qualification. In UNESCO (265, 1965 and 1970 editions) illiteracy rates are given for populations aged 15 and over as indicated in the latest census or survey; and also illiteracy rates classified by age and sex. According to Stone (202) the illiteracy rate in the population aged 15 and over varies in proportion to the population growth divided by the dollar value of the GNP. On the evidence of observations for 114 countries, for which all these data are available, 80 per cent of the variance in illiteracy rates can be accounted for by this ratio.

17.56. The age at which education terminates and the average number of years spent in the educational system have already been referred to in connexion with pupils and students. The aim here is to present similar information in respect of the population which has left the educational system and not just for the latest vintage of leavers.

17.57. Measures of the academic level reached by different vintages in the population indicate the extent to which intermediate and higher education has expanded in recent times.

XVIII. EARNING ACTIVITIES, EMPLOYMENT SERVICES AND THE INACTIVE

A. Introduction

18.1. This chapter begins with an attempt to define earning activities by means of a discussion of the production boundary and alternative measures of the economically active population.

18.2. The many topics considered are grouped under four main headings: employment and unemployment; conditions of work; employment services; and the inactive.

18.3. The remainder of the chapter deals with characteristic classifications and with recommended series and social indicators.

B. The production boundary

18.4. The earning activities to be recorded can be defined with the help of the concept of the production boundary, which has already been mentioned in connexion with the educational boundary. The core of the concept of production is the output of goods and services for the market. The greater part of these goods and services is produced in clearly distinguishable workplaces, or establishments: farms, mines, factories, shops and so on. It has to be recognized, however, that not the whole of the output of every establishment is intended for the market. In many farms, for instance, a certain part of the output is not sold but is used to feed the farmer and his family; since this unmarketed output is produced in a market-oriented establishment, or at least in an establishment of a kind which is typically market-oriented, it is usual to include it in the measurement of production. Again, letting living accommodation is one of the services which are considered to be part of production, its valuation being based on the measurement of rent; in the case of owner-occupied dwellings, where the landlord (the producer) and the tenant (the consumer) are one and the same person, it is usual to impute a rentable value to the dwellings, so that the services they provide should not be excluded from the measurement of production.

18.5. Where production takes place in an institution or in circumstances which are not market-oriented, the *prima facie* assumption is that it should not be recorded in the economic accounts. For instance, in the case of households all that is normally recorded as production are the goods and services sold to them, without any imputation for further processing by the household members themselves. Households, it is said, lie outside the production boundary.

18.6. Although this treatment gives rise to such well-known paradoxes as that total output is reduced if a man marries his cook and she continues to cook for him, it is easy to see that from a practical point of view some such convention is essential; partly because household and amateur activities are hardly documented at all, so that in making imputations there would be very few data to go on, and partly because they merge imperceptibly into the process of living, which goes far beyond the scope of economic science. This is not to say that information on household and amateur activities would not be interesting: for social analysis it clearly would be, as is argued in Nordhaus and Tobin (150); but only that it does not have a high priority in connexion with the economic issues for the analysis of which the national accounts have so far been mainly intended.

18.7. An intermediate situation arises where the activities of government departments and private non-profit-making institutions are concerned. These activities, although not market-oriented, are well-documented and clearly circumscribed. The services they provide fall easily into classifiable categories, such as education, medical care, road maintenance, defence, each with its own cost structure and financing mechanism. In other words, they can, up to a point, be measured in economic terms and so it is meaningful to include them inside the production boundary.

18.8. If these criteria are accepted, productive activity can be defined as: any activity which is directed to the production of goods or services which is measurable in economic terms and in which, generally speaking, people are gainfully employed. And this definition leads naturally to a definition of earning activity as: any form of gainful employment in productive activity. There is widespread agreement among economists about these definitions, particularly in those countries which make use of the ideas underlying the United Nations System of National Accounts (SNA) in integrating their economic statistics. The USSR and most other socialist countries make use of the ideas underlying the Material Products System (MPS), which excludes many services from the concept of production, with the consequence that people can be gainfully employed outside the sphere of production. However, thanks to the work on links between the two systems, it is now possible to translate anything said in the language of one into the language of the other. For present purposes it is convenient to use the concept of production as it appears in the SNA.

C. The economically active population

18.9. Following the argument of the preceding section it can be said that anybody gainfully employed, or seeking gainful employment, is a member of the labour force or economically active population. When it comes to measurement, alternative methods of collecting data give rise to two somewhat different concepts which need to be distinguished. The first, usually termed the "labour force", includes all those who have been in employment for some part of a recent interval of time, say the last fortnight; the second, usually termed the "gainfully occupied", includes all those who have had some earnings during, say, the past year. In general, these two concepts will give rise to different measures of the economically active population. This leaves the following groups in society outside the economically

active population: (*a*) students (who are educationally active); (*b*) women occupied solely in domestic duties; (*c*) retired persons; (*d*) persons living entirely on their own means excepting subsistence agriculture, hunting and fishing; and (*e*) persons dependent wholly on others.

D. Employment and unemployment

18.10. Let us begin this section by defining employment.

1. Definition of employment

18.11. Following a resolution of the Eighth International Conference of Labour Statisticians in Geneva, 1954, employment is defined as follows by the International Labour Office (112, vol. II):

(i) Persons in employment consist of all persons above a specified age in the following categories:
   (*a*) at work: persons who perform some work for pay or profit during a specified brief period, either one week or one day;
   (*b*) with a job but not at work: persons who, having already worked in their present job, were temporarily absent during the specified period because of illness or injury, industrial dispute, vacation or other leave of absence, absence without leave, or temporary disorganization of work due to such reasons as bad weather or mechanical breakdown.

(ii) Employers and workers on own account should be included among the employed and may be classified as "at work" or "not at work" on the same basis as other employed persons.

(iii) Unpaid family workers currently assisting in the operation of a business or farm are considered as employed if they worked for at least one-third of the normal working time during the specified period.

(iv) The following categories of persons are not considered as employed:
   (*a*) workers who during the specified period were on temporary or indefinite lay-off without pay;
   (*b*) persons without jobs or businesses or farms who had arranged to start a new job or business or farm at a date subsequent to the period of reference;
   (*c*) unpaid members of the family who worked for less than one-third of the normal working time during the specified period in a family business or farm.

2. Full-time, part-time and spare-time employment

18.12. In trying to classify the labour force by economic activity we run into precisely the same kind of problems as we met when trying to classify students by educational activity.

18.13. As with students, the simple case is that in which an individual works full-time in a single establishment. Making all allowances for the existence of multiple jobs and of part-time and spare-time work, this case is of overwhelming importance and justifies the idea of regarding a particular workplace as the primary centre of activity of most members of the labour force just as, in the preceding chapter, we regarded a particular educational establishment as the primary centre of activity of all full-time pupils and students.

18.14. The existence of multiple jobs poses the problem of assigning the multiple-job holder to his principal activity. This can be attempted by reference to his main, continuing centre of activity. Thus the university lecturer in engineering who regularly does a certain amount of consulting work for an engineering firm should be assigned to the educational industry; the stockbroker who owns, and in part runs, a farm should be assigned to the finance industry. In some cases the holding of several jobs is more a matter of words than of reality. The university teacher who is seconded to a government department for a number of years but who is able to resume his university appointment at the end of his period of secondment is not a multiple-job holder; in principle at any rate he passes from one job to another and back again.

18.15. Part-time workers are those who do some paid work but are primarily attached either to a learning activity or to the residual group of the economically and educationally inactive. In most cases it should not be difficult to decide which is their principal activity: students who work their way through college are primarily students and secondarily workers; workers who spend a day a week attending courses at a technical college are primarily workers and secondarily students. An example of a part-time worker from the educationally and economically inactive group is the wife of a graduate student who spends three mornings a week as an assistant on a research project.

18.16. Spare-time workers are those who have less regular and definite commitments than those considered in the last paragraph. Generally speaking, they will have a specific task assigned to them and will be paid for what they complete. An example is the housewife who undertakes to sew or knit at home for a fashion shop on a piece-work basis. Another example is the employee who does odd jobs in his spare time.

18.17. Many forms of seasonal and occasional work further complicate the picture. Hop pickers, temporary postmen and shop assistants at Christmas time, waiters who work in a locality during its season but for the rest of the year are differently occupied or are unoccupied, students who take a job during the summer vacation are all examples of the many mixtures of activities that can be found in the real world.

18.18. As in the case of educational activities, the best course is to begin with the simple cases and then try to elaborate the picture as far as it seems important to do so. Apart from the decision to ignore certain issues as uninteresting or unmeasurable, the choice of the period of account and its starting date will automatically rule out certain complications. For instance, there are no hop pickers or temporary Christmas workers on 1 January.

3. Definition of unemployment

18.19. In the International Labour Office (112, vol. II) unemployment is defined as follows:

(i) Persons in unemployment consist of all persons above a specified age who, on the specified day or for a specified week, were in the following categories:

(*a*) workers available for employment whose contract of employment had been terminated or temporarily suspended and who were without a job and seeking work for pay or profit;

(*b*) persons who were available for work (except for minor illness) during the specified period and were seeking work for pay or profit, who were never previously employed or whose most recent status was other than that of employees (i.e. former employers, etc.), or who had been in retirement;

(*c*) persons without a job and currently available for work who had made arrangements to start a new job at a date subsequent to the specified period;

(*d*) persons on temporary or indefinite lay-off without pay.

(ii) The following categories of persons are not considered to be unemployed:

(*a*) persons intending to establish their own business or farm, but who had not yet arranged to do so, who were not seeking work for pay or profit;

(*b*) former unpaid family workers not at work and not seeking work for pay or profit.

18.20. Experience shows that this is an area in which it is not easy to obtain comparable data, partly because countries depart from one or more of the above criteria and partly because the results are sensitive to the sources and methods used. In developing countries, in particular, it is difficult to obtain data on the employment status of the population which adequately represent the situation. Finally, there is the question of underemployment, that is to say employment on work which does not make full use of the worker's skill and training. Recommendations concerning concepts, definitions and methods of measurement relating to this issue are given by the International Labour Office (110).

4. Employment and unemployment in the active sequence

18.21. In recording the population of working age, classified, say, by industry in the active sequence, we have the choice of using either the concept of the economically active population, classifying the unemployed who have already been employed by the industry in which they last held a job, or the concept of the employed population, treating the unemployed as a separate category. The first treatment, which requires a separate category for the unemployed, such as unemployed school leavers, who have never been employed, is in some ways the simpler of the two; but the second treatment will be advantageous if it is desired to classify the unemployed by some criterion other than industry, say by duration of unemployment.

5. Employment in relation to output and productivity

18.22. This important subject will not be dealt with in this report since it was treated at some length in the SNA (255, chapter IV and its mathematical annex). The discussion there was in terms of the relationship of output to all inputs and not just to labour input, a concept usually referred to as total factor productivity. Recent contributions to the debate on this subject are provided in Denison (51) and other papers published at the same time. A number of calculations, mainly relating to Britain, are given in Armstrong (10).

6. Labour mobility

18.23. Apart from regional mobility, which affects all groups in the community and was touched on in chapter X above, there are two other forms of mobility which are important in the case of labour: mobility between occupational and status groups and mobility between industries. Since one of the dimensions of social class is usually measured by the first of these criteria, occupational mobility was discussed in section G of chapter XII above in connexion with intragenerational social mobility. This leaves industrial mobility to be dealt with here.

18.24. An analysis of the movement between industries requires information on gross inter-industry flows, such as is provided for Britain by the United Kingdom Department of Employment (229, April 1970). This source provides data on the gross flows between the twenty-four orders of the Standard Industrial Classification, set out by the United Kingdom Central Statistical Office (222), in respect of males and females separately for the year beginning in mid-1967. The estimates are obtained from a one per cent sample of national insurance cards.

18.25. A standard table of the form of table 7.1 above can be formed by supplementing this information with estimates of: (*a*) the opening and closing stock vectors; (*b*) the leading diagonal of the survival matrix, that is to say the numbers of individuals who, at each date, were employed in the same industry; and (*c*) the new entrants into and final leavers from each of the industry groups. Such a table would enable a simple indicator of industrial mobility, the sum of the off-diagonal elements in the survival matrix divided by the sum of all the elements in the survival matrix, to be calculated; and it would provide a basis for estimating the industrial distribution of labour to which a continuance of present patterns of movement would tend.

18.26. A somewhat different aspect of labour mobility is mobility within organizations arising from recruitment, promotion and retirement rules and from wastage rates. This problem has been studied in considerable detail in Bartholomew (16) in respect of business and governmental organizations and in White (279) in respect of church hierarchies. In Stone (204) it is shown that the models used are examples of the forward and backward models of chapter VII above.

E. Conditions of work

18.27. Let us turn now to various aspects of the conditions of work.

1. Hours of work

18.28. So far, the labour force has been discussed largely in terms of numbers with only passing reference, as in the cases of part-time employment and of the overlap between learning and earning activities, to the time actually spent at work. Information on hours worked is needed for many purposes and several different concepts have to be distinguished. First, normal hours of work comprise all hours worked during the normal period of work, time spent at the place of work waiting or standing by, as well as time corresponding

to short rest periods at the workplace, including tea and coffee breaks. Second, hours actually worked comprise normal hours of work *plus* overtime, whether spent in working or resting as above. And, finally, hours paid for, which include, in addition to hours actually worked, hours paid for but not worked, such as paid annual vacation, paid public holidays, paid sick leave and other paid leave.

18.29. These distinctions are important and at the present time many of the factors that influence them are undergoing rapid change. Thus, there is a general tendency for normal hours of work to fall and, while part of the increase in non-working time may be swallowed up in a longer journey to work, the change contributes either to an increase in leisure time or to a larger part of the working day being paid for at overtime rates, since hours actually worked tend to fall more slowly than normal hours. Again, in many countries, the numbers receiving paid holidays are increasing and so is the length of the holiday period, all of which increases the hours paid for but not worked.

18.30. A factor which influences hours actually worked but which is not allowed for in the above definition is time lost in trade disputes. Reference will be made to this in paragraph 18.46 below.

2. Industrial accidents, injuries and disability

18.31. Compared with sickness, industrial injury makes only a small contribution to days of certified incapacity; in Britain, the figure was under ten per cent of the total in 1970-71 according to the United Kingdom Central Statistical Office (226, No. 3, table 25). However, the extent of industrial accidents and injuries varies widely over countries, industries and time periods as also do the legislative provisions for the regulation of industrial processes and the installation of safety devices. In Britain, for instance, the number of persons killed in industrial accidents in 1968 was, according to the United Kingdom Department of Employment (231, table 200), less than one-fifth of the number killed in 1912 despite a substantial rise in the population between the two dates.

18.32. Certain aspects of industrial disability are more relevant to the health sequence than to the present one. It would appear that some industrial occupations are associated with the contraction of certain types of disease although the presence of these diseases may not be detected until long after the relevant industrial occupation has been left. This is an instance of the usefulness of being able to connect conditions relevant to health at different stages of life.

3. Physical and psychological conditions

18.33. While some employers endeavour to maintain good physical conditions in their workplaces, others do not, and so many governments lay down standards with respect to such matters as working space, lighting and hygienic arrangements and endeavour to enforce these standards by means of inspection.

18.34. There can be no doubt that good working conditions in the material sense are desirable, but it is almost certainly true, as Brown (37, p. 192) reminds us, that they have little or no direct relationship to good morale. Accordingly, if we are interested in questions of industrial morale, it is to human relationships within the workplace that we should turn first rather than to the physical conditions mentioned above or even to the level of wages, benefits and welfare provisions discussed below. If we are looking for external factors which tend to promote or retard good human relationships, we might consider at an early stage the size of the establishment and the fluidity of the staff. It must be relatively difficult to maintain morale in a large organization staffed by a mainly transient workforce.

4. Profit-sharing, co-partnership, participation in management

18.35. Schemes with some such titles as the above have been adopted by certain individual firms for many years. Although the motives for introducing them may differ, they serve, generally speaking, to recognize and emphasize the common interests of management and labour. It might be useful, in studying industrial relations, to have more information about their prevalence and the means of comparing the results obtained by organizations which adopt them and those which do not.

5. Wage rates and earnings

18.36. In any discussion of wages and salaries it is desirable to distinguish between minimum rates, average rates and average earnings.

(a) *Minimum rates*

18.37. These rates are usually based on those quoted in national collective agreements or laid down by bodies, such as wages boards or councils, concerned with implementing minimum wage legislation. These sources usually specify minimum rates for different groups of workers: men and women, adults and juveniles, skilled and unskilled. The rates are either hourly rates or weekly rates for a specified normal number of hours per week. By suitable weighting, minimum rates for individual industries and, in principle, for industry as a whole can be calculated from this kind of information.

(b) *Average rates*

18.38. For a great variety of reasons individual workers or groups of workers may be paid at more than the national minimum rate. For instance, an individual may have some special skill and so be paid at a higher rate than the minimum for skilled workers; or, again, he may be employed by a firm which habitually pays in excess of minimum rates. Thus the average rate for a normal week's work will typically exceed the corresponding minimum rate.

(c) *Average earnings*

18.39. For a variety of reasons, an individual's actual earnings may exceed the average rate for a normal week's work. For instance, it is usual for actual hours to exceed normal hours and so there are additional hours to be paid for, generally at a much higher overtime rate. Further, there may be various bonuses and special payments to be added, for example on account of piece-rate working. Finally, where there is a sustained, high demand for labour, employers may resort to the upgrading of individuals or groups of workers as a means of retaining their services. As a consequence, average earnings will pull away from average rates to an extent that cannot be accounted for by overtime, bonuses and the like.

6. Contributions and benefits

18.40. In addition to earnings, employees obtain from employers a number of contributions made on their behalf and benefits which they may receive personally or share with others. The main contributions made by employers are to social security funds and to private sickness and pension schemes, all of which are included in compensation of employees in the SNA; and the same is true of benefits, such as the value of free coal to miners or free produce to farm workers, which accrue to individuals as income in kind.

18.41. Some firms provide a range of other facilities for the benefit or convenience of their employees, such as medical care, sports grounds, free or subsidized canteens and transport. All such costs appear in the SNA as part of the cost of intermediate inputs, though in the discussion in the SNA (255, p. 15) of the functional classification of inputs the desirability of a further categorization of intermediate inputs is recognized.

7. Income from employment and self-employment in the SNA

18.42. In the SNA, the compensation of employees (wages, salaries, employers' contributions and income in kind) appears as an outgoing from the activity accounts of industries and the producers of public and private non-profit services and as incomes into a set of value added accounts which allocate their receipts to institutional sectors of origin. These sectors then distribute their receipts by form of income, so that the components of the compensation of employees appear separately, and these different forms of income are finally allocated to the institutional sector of receipt, whence they are spent on consumers' goods and services and on transfers (such as direct taxes on income) or they are saved. The link between employees and their compensation as a whole is made at the first of these stages; and the components of this compensation are classified by institutional sectors of origin and receipt but not by activities.

18.43. The treatment of income from self-employment is a little different from the above although its movement from the activities in which it is generated to the sector by which it is finally received is the same. In the activity accounts all factor income, other than the compensation of employees, appears under the heading of operating surplus which is not further subdivided. In passing through the accounts for forms of income, entrepreneurial income is shown separately but even at this point it is treated as "mixed" income and no attempt is made to show separately that part of it which is due to the labour of working proprietors and the self-employed.

18.44. A table is proposed in the SNA (255, chapter VIII, table 10), relating to employment by kind of economic activity. This table makes provision for recording persons employed, in total and employees only, and for man-hours worked by employees. If the labour income deemed to accrue to working proprietors and the self-employed were also to be shown by kind of economic activity, then the operating surpluses shown in the activity accounts would need to be further subdivided. This would involve a kind of imputation not suggested in the SNA; but it would probably only be important in a few branches of activity, such as agriculture and retail trade.

8. Industrial unrest and conflict

18.45. Industrial relations vary greatly at different times and places. After a period of comparative tranquility, unrest may develop and flare up into stoppages of work occasioned by strikes or, less usually, lock-outs. Stoppages in any year can be summarized statistically in three series: their number, the number of workers involved and the number of working days lost.

18.46. These three indicators measure quite different aspects of stoppages and do not, in general, move together. For instance, in Britain, according to the United Kingdom Department of Employment (231, table 197) and the United Kingdom Central Statistical Office (226, No. 3, table 21), the number of stoppages has been, in recent years, about four times as large as in the 1890s whereas the number of working days lost has been, on the whole, rather less than in the earlier period. Only since 1967 has the number of days lost shown signs of returning to the levels which were quite common in the early decades of this century.

18.47. Stoppages can be analysed in terms of their principal cause: what the stoppage is all about. In Britain in recent years by far the most frequent cause is described as wage disputes and, in particular, claims for increases in wages. This appears to be in direct opposition to what was said in paragraph 18.34 above, but it can be doubted whether this is really so. The increases in wage rates now regularly demanded are not realistic, in the sense that they could not be achieved in real terms even under conditions ideal from the point of view of those who demand them. It would appear, therefore, that under present conditions wage claims provide a socially acceptable basis for conflict but that the true basis lies elsewhere.

18.48. Many types of institution are involved in industrial conflict: trade unions, employers' organizations and a variety of boards, tribunals and courts. In the case of trade unions, it is usual to have information on their number, the size, composition and dispersion of their membership and their industrial or occupational coverage. The improvement of traditional statistics in this area would seem to depend on advances in the theory of conflict carried out under conditions of changing attitudes and opinions.

F. Employment services

18.49. The two main services which will be considered in this report are employment exchanges and industrial retraining and manpower programmes.

1. Employment exchanges

18.50. Although they may engage in a host of administrative duties, such as paying out unemployment benefits, the principal function of employment exchanges is to provide an information service for employers and employees and to put employers with specified vacancies in touch with workers with specified skills. To this end they keep registers of the unemployed and of notified vacancies.

18.51. The main statistical series needed in respect of this aspect of the work of employment exchanges are: notified vacancies and vacancies remaining unfilled; registered unemployed; and numbers of persons placed in employment. This information is required by occupation and by the sex and age group of the unemployed. Since it arises at individual employment exchanges, it readily permits of a regional classification.

18.52. Accounting information is also needed in respect of employment exchanges, as of all other government activities. In the SNA, employment exchanges are included (255, p. 88), under economic services (general administration, regulation and research). In the same category are to be found: price and wage control agencies; labour conciliation services and arbitration boards; and factory inspection and the regulation of working conditions. These are all relevant to the subject matter of this chapter but are simply mentioned here.

18.53. The accounting framework proposed for such services (and the corresponding purposes) in the SNA was outlined in section A of chapter VI above and illustrated by a set of accounts for public educational services. The same principles should be followed here but the details are likely to vary with the administrative arrangements prevailing in different countries.

2. Industrial retraining and manpower programmes

18.54. With increased economic and, still more, with increased technical change, traditional methods of acquiring skills through apprenticeship and of maintaining them through gradual adaptation on the job appear to be breaking down. This links up with what was said in section F.2 of chapter VII above.

18.55. As a consequence of these developments, a number of governments have established organizations concerned with training and retraining. In Britain, the Engineering Industry Training Board is a case in point.

18.56. The statistical series required of these organizations are similar to those required of other educational establishments: that is to say, information on stocks and flows of students, accounting data and data on teachers and other inputs. In this case it is important to know the industrial characteristics of the enrolments and new entrants and the nature of the employment obtained by leavers.

G. The economically and educationally inactive

18.57. In section C of this chapter the groups in society outside the economically active population were listed. If one of these groups, students, is omitted from the list, we are left with those groups which are neither economically nor educationally active. It is convenient to discuss the composition of these groups under slighty different headings from those adopted in section C above.

1. Children outside the school system

18.58. These children, mainly the very young, do not pose a serious problem in demographic accounting, but it must be recognized that even in the best regulated societies there are always a certain number of children of compulsory school age who do not attend school. There are the subnormal and the chronic invalids who are not even able to attend special schools or do so only for a time; there are the children of nomadic or irregular families who somehow manage to escape school attendance; and there are the normal children living in remote districts whose parents can convince the authorities of their ability to provide a better education at home than could be provided by the school facilities of the neighbourhood. The number of such children is likely to be a very small proportion of their age group but in total they are not negligible and certainly not within the margin of error of the available statistics.

2. The unoccupied

18.59. Leaving aside the unemployed, who were discussed in section D of this chapter, the most important group in this category are housewives who are neither educationally nor economically active. In addition there are the more obviously unoccupied of both sexes who dislike work and manage to resist social pressures in its favour. They can be found both at the top of the socio-economic pyramid, the well-to-do who pass their time in cultural or sporting pursuits, and at the bottom of it, the tramps and destitutes who somehow muddle through. It is generally supposed that they are rather rare in the middle ranges of the pyramid, but very little is known about this.

3. The retired

18.60. This category gives rise to two main problems: the link with part-time employment at the early ages of retirement and the link with the inmates of institutions in extreme old age.

4. The inmates of institutions

18.61. At any time many people are to be found not living in private households but in some form of institution such as orphanages, homes for old people, hospitals, asylums and prisons. In the last three cases the duration of most visits is short: to be measured in weeks rather than in years. There arises, therefore, the kind of problem which is encountered in connexion with foreign visitors and with the unemployed: do we need to record states of only short duration? In a study of the institutional population the answer would, of course, be yes; but if our main concern is with educational and economic activities the answer would seem to be no. Nothing useful would be gained by recording a change of state every time a student, worker or anyone else entered a hospital for a short treatment. All that seems necessary is to record what may be termed the migrant element of the institutional population and the inmates who are expected to remain inmates for a considerable time.

H. Characteristic classifications

18.62. The discussion in this section is restricted to the most important classifications characteristic of the economically active population: kind of economic activity engaged in, occupation, industrial status, educational level and area, and duration of unemployment. Consideration must also be given to the best means of recording part-time economic activity.

1. Kind of economic activity

18.63. This classification can be based on the *International Standard Industrial Classification of All Economic Activities* (ISIC) set out by the Statistical Office of the United Nations (254). It is important since, if employment is classified in this way, a link can be made between the output of different branches of production and their labour input. The only classification of employment recommended in the SNA is of this kind (255, chapter VIII, table 10). It is desirable for many purposes to tabulate males and females separately and also to have cross tabulations of the

form: kind of economic activity × age. Such matrices show the industrial distribution of the labour force in each age group, the changes in this distribution from year to year and the ages at which members of the labour force tend to enter and leave different industries. But they do not show where the gains come from or where the losses go to. Information of this kind would be useful in studying the equilibrating and disequilibrating effects of the industrial mobility of labour discussed in section D.6 above.

2. Occupation

18.64. This classification can be based on the *International Standard Classification of Occupations* (ISCO), set out by the International Labour Office (111). ISCO relates to the whole civilian working population and, in the latest (1968) version, the classification structure has four levels, providing successively finer detail, as follows: major groups, one of which relates to workers not classifiable by occupation, (8); minor groups (83); unit groups (284); and occupational categories (1,506). The seven effective main groups relate to: professional, technical and related workers; administrative and managerial workers; clerical and related workers; sales workers; service workers; agricultural, animal husbandry and forestry workers, fishermen and hunters; and production and related workers, transport equipment operators and labourers.

18.65. In the study of labour productivity, which is usually measured as the ratio of output to labour input, it is desirable to distinguish between workers on the main process of an industry and workers on complementary processes. For instance, in the chemical industry the main activity is making chemical products and a complementary activity is transporting these products in special vehicles operated by chemical companies. If we look at the main-process workers in any industry we shall typically find that they become more productive with the passage of time. But if a chemical plant decides to set up its own transport service, any reduction in the number of chemical workers employed will be offset by an influx of lorry drivers; and since the industry's output will normally be measured in terms of the quantity of chemicals produced, irrespective of who undertakes their transport, the ratio of output to labour will be distorted. The correct treatment here is to distinguish between the output of chemicals and the output of transport services by the chemical industry and to record separately the labour employed in each process.

18.66. The introduction into a system of demographic accounts of occupational classifications would enable us to construct for each year an occupation × kind of economic activity matrix showing the distribution of the labour force by skill. A succession of such matrices would be useful in the study of technical change and of changes in labour productivity. It would also be useful, in conjunction with output projections, to throw light on the changing demand for different types of skill. All industries, generally speaking, tend to lose unskilled labour and gain skilled labour, but there are many factors which cause systematic transfers between industries such as the disappearance of agricultural tractor drivers into motor garages or of mathematics teachers into computing firms. If these transfers take place unperceived for several years, they may prove very difficult to correct and may eventually bring about the decline and even extinction of activities which would be worth preserving.

3. Industrial status

18.67. A classification of the labour force by industrial status is desirable if only to obtain a functional match between primary inputs and their rewards. Thus income from employment in the SNA relates only to employees, while in branches of production such as agriculture and retail trade a considerable amount of the labour is provided by owners, own account workers and unpaid family members. The value added which arises from the labour of such people appears in the entry "operating surplus" or, if this is subdivided, in some form of mixed income.

18.68. This somewhat limited view of industrial status will not correspond to a general social or socio-economic ranking of members of the labour force and will not lead to homogeneous categories: the great painter or musician will be in the same category as the barrow boy or the working proprietor of an ice cream stall; and the managing director of a large corporation will be in the same category as a municipal dustman. If a more detailed classification, serving different purposes from the one above, is wanted, it might be reached through using, in addition, occupational and educational distinctions.

18.69. The major groups of ISCO, combined in some instances, for example sales and service workers, might serve as the point of departure for the classification. These categories might be subdivided either in terms of the capacities expected of them or in terms of the education and training they have typically received. For example, professional, technical and related workers might be classified according to capacities into: scientists, engineers, doctors, barristers and many other professionals, who should be experts in their field of knowledge and capable of extending its boundaries; and technicians and related workers, who should possess a certain conceptual ability, applying judgement in their work even if they take the techniques they use as given. Production and related workers might be classified into: craftsmen, who should possess manual and mechanical dexterity and apply judgement in its exercise; operatives, mainly machine-minders, who should be able to make simple observations and carry out simple manual operations, allowing for the fact that the machinery over which they watch may become increasingly complicated; and unskilled workers, who need possess none of these capacities since all they are expected to do is fetch and carry or its equivalent. A definition by education and training might run as follows: professionals typically have as a minimum qualification either a first degree or membership of the appropriate professional organization; the minimum qualification for technicians generally involves passing a technical examination; for craftsmen, serving an apprenticeship; for operatives, training on the job; and for unskilled workers, nothing.

18.70. Further classification might be based either on some finer distinctions of skill or on some form of ranking based, say on seniority or experience or the degree of responsibility achieved. Such refinements would undoubtedly be very interesting, in fact they would be indispensable if we wanted to make a special study of any productive activity.

4. Educational qualifications

18.71. The first classification needed here is by the highest qualification obtained from the educational

system and has already been discussed in the preceding chapter. In addition, at any rate in respect of the higher levels of qualification, it is desirable to know at least the broad subject area in which the qualification was obtained. Examples of this classification crossed with such characteristics as sex, age, industry of employment are given by the United Kingdom Central Office (227) for 1966 in respect of qualified manpower in Britain.

5. Duration of unemployment

18.72. The hardship resulting from unemployment depends very much on its duration. A certain amount of short-term unemployment is bound to result from changes of job and can be met by social security arrangements; but the same cannot be said of long-term unemployment, which indicates a lack of adaptability in the system.

6. The recording of part-time economic activity

18.73. Many members of the labour force are economically active for only part of their time, one reason being that for the rest of their time they are engaged in some form of learning activity. Since it is desirable to recognize secondary activities, there would seem to be two ways of dealing with this problem. The first is to classify the labour force according to the secondary activity in which they are engaged. The second is to construct vectors of time spent in different activities for the various categories into which the labour force is divided and apply these vectors to the different categories.

I. Recommended series

18.74. The items of data, classifications and social indicators in respect of earning activities, employment services and the inactive are set out in table 18.1 below.

Table 18.1. Earning activities, employment services and the inactive: items of data, classifications and social indicators

Items of data	*Characteristic classifications*	*Other classifications*	*Social indicators*
	A. The economically active, employment and unemployment		
(*a*) The economically active			
1. Number of economically active	Industry, occupation, industrial status	Age, sex, geographical area, urban or rural area, size and type of household, national or ethnic origin, socio-economic class, highest level of education and grade (year, diploma or degree) completed	Average annual rate of growth Activity rates Average length of working life Average age at retirement Index of industrial mobility
2. Entrants into economic activities	as above	as above	
3. Leavers from economic activities	as above	as above	
(*b*) The employed			
1. Numbers in employment, full-time	as above	as above (omit size and type of household; add hours worked)	Index-number weighted by earnings Index-number weighted by years of education
2. Numbers in employment, part-time	as above	as above	Index-number of full-time equivalents Percentage engaged in agriculture Percentage engaged in manufacturing Percentage with highest educational qualification at different levels
3. Number of engagements and of discharges	as above	as above (omit hours worked)	Crude engagement rate Crude discharge rate
(*c*) The unemployed			
1. Number of unemployed	Industry, occupation, industrial status, duration of spell of unemployment	as above	Percentage unemployed of economically active Average age Average duration of unemployment
	B. Conditions of work		
(*a*) Time worked by full-time employees and time lost			
1. Average normal hours per week	Industry, occupation, industrial status	Age, sex, geographical area, urban or rural area, hours worked	Ratio of hours actually worked to normal hours
2. Average hours worked per week	as above	as above	

Table 18.1. Earning activities, employment services and the inactive: items of data, classifications and social indicators *(continued)*

Items of data	*Characteristic classifications*	*Other classifications*	*Social indicators*
	B. Conditions of work (continued)		
3. Working days in year	Industry, occupation, industrial status	as above (omit hours worked; add days worked)	
4. Working days lost, on average, in unemployment, industrial injuries, sickness, absence, holidays, trade disputes and other causes	as above	as above (omit days worked)	
5. Average days worked per year	as above	as above (add days worked)	Ratio of days worked in year to total working days
6. Number of employees receiving paid holidays of different lengths	as above	as above (omit days worked)	Average length of paid holidays
(*b*) Industrial accidents, injuries and disabilities			
1. Deaths	as above	Age, sex	
2. Chronic diseases contracted	as above	Age, sex	
3. Working days lost per year	as above	Age, sex	Working days lost per head
(*c*) Aspects of work and workplaces			
1. Numbers in establishments of different sizes	as above	For individuals: age, sex, geographical area, urban or rural area For establishments: size	Average number of employees per establishment The proportion of the labour force employed by the θ largest firms
2. Numbers engaged on assembly-line work	as above	as above	
3. Numbers engaged in multiple shift work	as above	as above	
4. Numbers in firms operating a profit-sharing scheme	as above	as above	
5. Numbers in firms operating a co-partnership scheme	as above	as above	
6. Numbers in firms with workers' participation in management	as above	as above	
(*d*) Compensation of employees			
1. Minimum rates	as above	as above (omit size of establishment; add size of payment)	
2. Average rates	as above	as above	Ratio of average earnings to average rates
3. Average earnings	as above	as above	Average earnings at constant prices
4. Average compensation of employees	as above	as above (omit size of payment)	Average compensation of employees at constant prices Ratio of compensation of employees to national income
5. Numbers covered by private pension, health insurance and similar welfare schemes	as above	as above	
(*e*) Industrial relations			
1. Number of trade unions	Industry, occupation, industrial status, size		Ratio of union members to the workforce
2. Number of employers' organizations	Industry		
3. Number of employees involved in disputes and stoppages	as above		
4. Number of stoppages	as above		
5. Working days lost in stoppages	as above	Length of stoppage	Working days lost per head

Table 18.1. Earning activities, employment services and the inactive: items of data, classifications and social indicators *(continued)*

Items of data	*Characteristic classifications*	*Other classifications*	*Social indicators*
		C. Employment services	
(*a*) Employment exchanges			
1. Registered as seeking work	Industry, occupation, employment status	For individuals: age, sex, geographical area, urban or rural area, national or ethnic origin, highest level of education and grade (year, diploma or degree) completed For establishments: institutional sector, geographical area, urban or rural area	Percentage of the economically active registered with employment exchanges
2. Placements	as above	as above	Percentage of registrants placed
3. Average number of visits and referrals per person registered	as above	as above	
4. Registered vacancies	Industry, occupation	For establishments: institutional sector, geographical area, urban or rural area	
5. Vacancies remaining unfilled	as above	as above	
(*b*) Retraining programmes			
a. Enrolments	Industry, occupation (initial and for which trained)	Age, sex, national or ethnic origin, highest level of education (year, diploma or degree) completed, type of programme	Probabilities of completing courses
b. New entrants	as above	as above	
c. Drop-outs	as above	as above	
d. Continuers	as above	as above	
e. Completers	as above	as above	
f. Student-hours of instruction and supervision	as above	as above	
g. Lengths of courses	as above	as above	
(*c*) Inputs and outputs of employment services			
1. Inputs and outputs of employment services expressed in money terms drawn in the accounting form outlined in the SNA	Industry, occupation	Institutional sector, nature of service, type of transaction	Total costs per user Index-numbers of inputs and input prices
2. Inputs, primary and intermediate, expressed in physical terms	as above	Institutional sector, nature of service, type of input	Student-teacher ratios
3. Input prices	as above	as above	
		D. The inactive	
(*a*) Numbers of inactive members of population in different categories	Category of inactivity	Age, sex, geographical area, urban or rural area, size and type of household, national or ethnic origin, socio-economic class	Percentage of population in different categories of inactivity
(*b*) Number of entrants into different categories of inactivity	as above	as above	
(*c*) Number of leavers from different categories of inactivity	as above	as above	

18.75. As can be seen, table 18.1 is divided into four panels relating respectively to: the economically active, employment and unemployment; conditions of work; employment services; and the inactive.

18.76. The items of data in the first panel of this table relate in the main to numbers in different parts of the economic system and to their movements into, through and out of it.

18.77. The items of data in the second panel relate to a number of different aspects of conditions of work: hours and days worked, time lost and holidays; industrial accidents, injuries and disabilities; the size and character of establishments and arrangements for employee participation; wage rates, earnings and the compensation of employees; and industrial relations.

18.78. The items of data in the third panel relate to the work of employment exchanges, industrial retraining schemes and other employment services. These data include accounting information and series of inputs and input prices.

18.79. The items of data in the fourth panel relate to the numbers in different inactive groups and to their movements into and out of the active population.

1. Indicators connected with the economically active, employment and unemployment

18.80. The average annual rate of growth indicates how fast the labour force is growing whether or not, at any particular time, it is fully employed. It is of interest in relation to the growth of the population, the growth of output and the demand it places on capital resources to equip the additional workers up to contemporary standards.

18.81. Activity rates, calculated with respect to age and sex and, for women, with respect to marital status, measure the proportion of the relevant group which is economically active. These rates vary considerably as a consequence of continued education, earlier marriage and the general ageing of a population.

18.82. The average length of working life indicates the time spent in working out of a conventionally defined working span which is often taken as the 50 years from 15 to 64.

18.83. An index of industrial mobility relates the numbers who are attached to different industries at each end of a year either to the opening stock of economically active at the beginning of the year or to this stock less the deaths and other leavers from the labour force in the course of the year.

18.84. Index-numbers of employment weighted in various ways as suggested in table 18.1 provide alternative measures of the quantity of labour.

18.85. The percentages of total employment engaged in agriculture and manufacturing respectively provide a crude indication of the general nature of a productive system. Many other indicators of composition could be devised, such as the division between primary, secondary and tertiary employment.

18.86. Rates of engagement and discharge throw some light on labour turnover. They are crude indicators because, for instance, they contain no information on the length of time for which jobs have been held. The importance of this and other factors in the study of turnover in individual concerns is brought out in Bartholomew (16, chapter 6).

18.87. The percentage unemployed among the economically active is an important indicator not only of the ups and downs of economic activity but of the existence of a defective or excessive demand for labour.

18.88. The average age of the unemployed provides some indication of the extent to which unemployment tends to be concentrated in a particular part of the active age range, say among the elderly.

18.89. In any adaptive economic system there is likely to be a considerable amount of short-term unemployment, corresponding to the phenomenon of labour turnover, which is particularly marked among the young and among those who have not been long in their job. On the other hand if spells of unemployment of long duration are numerous, it must be supposed that for one reason or another the economy is not highly adaptive. The average duration of unemployment throws some light on this question.

2. Indicators connected with conditions of work

18.90. The ratio of hours actually worked to normal hours may be consistently greater than one, indicating that, on average, a part of working time is paid for at higher than normal rates. It seems likely that this factor does not change very fast and so fluctuations in the ratio may provide some indication of the varying pressures of work.

18.91. Total working days in the year are a measure of the number of days on which workplaces are open. The ratio of days worked to this total indicates the combined importance of the many reasons for which working days may be lost.

18.92. The average length of paid holidays indicates the extent to which provision is made by industry for this kind of leisure time. This average can be calculated with respect to the labour force as a whole or with respect to the smaller number of workers who in fact enjoy paid holidays.

18.93. Working days lost per head indicate the contribution to total working days lost made by industrial injuries etc.

18.94. The average number of employees per establishment is a crude measure of the importance of large establishments.

18.95. The proportion of the labour force employed by the θ largest firms is an indicator of industrial concentration in terms of the number of employees. It is usually applied to separate industries rather than to industry as a whole and reasons for its use in preference to alternative measures of concentration are given in Hart, Utton and Walshe (92, chapter 2).

18.96. The ratio of average earnings to average rates provides a measure of the phenomenon of "wages drift". Under conditions of full employment and trade union pressure average earnings may rise faster than average rates.

18.97. Average earnings at constant prices indicate the changing purchasing power of earnings per head over consumers' goods and services.

18.98. Average compensation of employees at constant prices indicates the changing purchasing power of total remuneration per head, including employers' contributions and other benefits, over consumers' goods and services.

18.99. The ratio of compensation of employees to national income is an indicator of the distribution of income between labour and other factors of production.

18.100. The ratio of union members to the workforce indicates the degree of penetration of trade unionism in different parts of the economy.

18.101. Working days lost per head indicate the contribution to total working days lost made by trade disputes.

3. Indicators connected with employment services

18.102. The percentage of the economically active registered with employment exchanges is intended to provide an indication of the proportion of the labour force seeking either employment or a change of employment. It is, inevitably, strongly influenced by the coverage of the employment exchange system.

18.103. The percentage of registrants placed indicates the success of the employment exchange system in meeting its principal aim.

18.104. Probabilities of completing courses indicate the extent to which, in all circumstances, trainees remain in their courses to the end and succeed in any final test.

18.105. Total costs per user indicate the expenses involved, including overheads, in servicing one user, such as a trainee in a particular course.

18.106. Index-numbers of inputs and input prices provide the input measures of output and the corresponding prices usually adopted in the national accounts.

18.107. Student-teacher ratios on different courses provide simple indicators of one aspect of educational quality.

4. Indicators connected with the inactive

18.108. The percentage of the population in different categories of inactivity indicates the extent to which the economically active population is, relatively speaking, expanded or contracted as a consequence of changes in the importance of the inactive groups. If we are interested in the educationally as well as the economically active then, obviously, all pupils and students must be excluded from the definition of the inactive.

XIX. HEALTH AND HEALTH SERVICES

A. Introduction

19.1. This part of the system is mainly concerned with states of health, the ways in which they can change, the treatment of adverse states, the costs and consequences of such treatments and the facilities available for them. The scope of the information needed is set out, in general terms, in the following paragraphs.

19.2. First, in the study of disease and disability it is useful to have a measure of prevalence, that is to say the proportion of the population which suffers from the disorder in question; and the usefulness of this measure is increased if it can be subdivided by sex and age and perhaps by other characteristics as well. Prevalence is a stock concept and a number of applications to different diseases have been brought together in Burch (39). These measures are subdivided by age and in most cases by sex; and the same can be said of a recent study of chronic disability reported in Bennett, Garrad and Halil (24).

19.3. Second, in addition to prevalence rates it is also useful to measure initiation rates and onset rates, the former preceding the latter by a latent period. These are flow concepts, the onset rate being the first derivative with respect to age of the prevalence rate and the initiation rate being displaced by the latent period to an earlier age. In the simplest cases treated in Burch (39), the age-specific prevalence rates are of the form $1 - \exp(-a\theta)$ where a is a constant and θ denotes age. As can readily be seen the initiation and onset rates in this case have the form of exponential decay curves.

19.4. The statistical framework and methods of analysis suggested in this report make provision for similar measurements except that everything is carried out in discrete rather than continuous time, use being made of age-specific transition probabilities rather than functions of age of pre-assigned forms. Allowance can be made for the medical history of individuals in measuring the transition probabilities.

19.5. Third, it is useful to make a number of measurements based on the concept of the expectation of life and its composition. This expectation can be measured at entry into any state and in each case the composition can be defined in terms of the time spent on average in different conditions of health or other medical categories. The outcome will typically depend on the steps taken to deal with predisposing conditions, such as obesity, and on the treatment adopted after the onset of a disease.

19.6. Fourth, an adverse medical condition can frequently be countered by one of a number of treatments. The choice of treatment can be regarded as a control variable and the compositions of life expectancies can be expressed as explicit functions of these variables. In principle, therefore, it is possible to work out the values that should be assigned to these variables if some objective function, such as the expectation at birth of equivalent years of healthy life, is to be maximized.

19.7. Fifth, it is useful to be able to link quantities and costs and to work out the cost implications for the future of present expectations.

19.8. Finally, for an understanding of medical histories it is almost certainly necessary to consider classifications which cannot be considered characteristic of the sequence of health and medical care. Occupation, housing conditions and income are examples of such classifications. The past as well as the present are important; the occupation which a man has given up long ago and which is unknown to his doctor may well be the true cause of an adverse condition in later life.

19.9. In what follows, boundaries will first be considered from several points of view. Later the main topics on which statistics are required will be discussed: the general state of health; the use of health services; the facilities available for these services; and the revenues and expenditures which arise in providing them.

19.10. The remainder of the chapter deals with characteristic classifications and with recommended series and social indicators.

B. Boundaries: health services in the SNA and other problems

19.11. It is convenient to begin this section with a statement of the coverage of health services as it is given in the SNA. But this is not the end of the matter. In this part of the system there are many boundary problems with other parts, and so this is a suitable place at which to introduce a discussion of this problem. Furthermore, information on health is used for a number of purposes, administrative and clinical, for which the coverage and detail are very different. It is convenient at this point to refer to the Technical Report Series of WHO and, in particular, to the reports of the WHO Expert Committee on Health Statistics, the fifteenth of which appeared in 1972 (292).

1. Health services in the SNA

19.12. That part of the accounting structure of the SNA which is relevant to health services has already been illustrated in section A of chapter VI above in its application to educational services. Here it remains only to set out the scope of health services as described in the SNA.

19.13. Medical and other health services provided by private non-profit institutions are described in the SNA (255, p. 89) as follows:

> "Medical, surgical, dental and other health services and individual care; immunization, vaccination and similar public health programmes; research into medical and dental techniques and technology; promoting and assisting the development and provision of medical, dental and other health facilities, serv-

ices and research. Included in the health services and care are hospitals, sanatoria and nursing homes; institutions for the care of the mentally ill or defective; medical, mental health, maternity and dental clinics; individual medical, nursing, midwifery and dental care."

It is also said (255, p. 89, footnote (*b*)) that:

"It is desirable to compile supplementary data on the expenditure and receipts of these bodies in respect of food, beverages and tobacco, clothing, and medicines and pharmaceuticals for individual use."

19.14. The following more detailed classification of health purposes is given in respect of public authorities (255, p. 88):

"*General administration, regulation and research*

"Ministries of health and similar government departments; regulation of standards in respect of hospitals, medical and dental clinics, doctors, dentists, nurses and midwives, health and sanitation; administration of national health schemes and medical insurance schemes; expenditure on, and grants for medical, dental and health research; and registration of information on vital events, collecting of statistics on infectious diseases and the like.

"*Hospitals and clinics*

"Hospitals and similar institutions, including insane asylums and care of mentally defective; expenditure on medical and dental clinics and similar centres; and the outlays in respect of hospital and clinical care, of national health and medical insurance schemes.

"*Individual health services*

"Medical, dental and midwifery services except in hospitals and clinics; provision of drugs and appliances; immunization, vaccination and similar field programmes; and outlays in respect of the services of individual doctors, dentists, etc. and drugs and appliances of national health and medical insurance schemes."

It is added, in describing these categories: first, that some outlays on health research of a more detailed character will be classified under hospitals and clinics; and second, that it is desirable to compile separate data on the outlays and receipts of hospitals and clinics for food, beverages and tobacco, clothing, medicines and pharmaceuticals for individual use.

19.15. So much for the institutionalized health services; there remain the profit-making enterprises to be assigned to health activities. It is clear that all forms of medical practitioner or specialist to whom individuals may turn for observation or treatment should be included here; and it is equally clear that the makers of pharmaceutical products should be included under the manufacture of other chemical products. An intermediate position is occupied by pharmacists, who, in addition to dispensing drugs and other medical supplies, sell toilet articles, beauty preparations, sun glasses and the like. They should be included under retail trade. Thus the income accruing to profit-making enterprises under the heading of health consists of the operating surpluses of all forms of medical practitioner together with the operating surpluses of all forms of private profit-making nursing homes, hospitals and clinics.

2. Overlaps with other parts of the system

19.16. It is clear from what was said in chapter XVI above that there are demarcation problems between health and welfare services. For instance, one aspect of care for the elderly and handicapped is the provision of home nursing, a service which could, with equal reason, be assigned to welfare or to health. Advice on family planning and the provision of abortions, though perhaps more relevant to population control than to health, are in fact mainly undertaken by health services. In the discussion of the economic accounts of education in section A of chapter VI, one of the ancillary services introduced was the school health service. Studies of a number of interactions between health and education are provided in Rutter, Tizard and Whitmore (182). In the discussion of earning activities in the preceding chapter, reference was made to the loss of working time through sickness and to industrial accidents, injuries and disability. In the case of health services, hospitals perform teaching and training functions which are clearly educational, though of a highly specialized kind.

19.17. Such overlaps as these are inevitable and it does not matter much in which of the larger aggregates a small service, like the school health service, is included. Such a question is likely to be settled in practice on conventional and administrative grounds: if it is the duty of the education authority to organize a school health service and if its cost falls on the education budget, the service is likely to be included in education; and, in the contrary circumstances, it is likely to be included in health. What is important in these circumstances, as has been emphasized by the Netherlands Central Bureau of Statistics (146, pp. 18-19), is that the service should be separately recorded so that it can be taken into account in discussions on either education or health.

3. Planning health services

19.18. For this purpose we are concerned with the whole range of conditions of health, ailments and treatments but only to the extent that they give rise to demands for general facilities or for different types of specialized facility. In building up the necessary statistics, it is convenient to distinguish four stages of the work. First, we require demographic projections, distinguishing sex, age, locality and so on. A considerable amount of information of this kind will normally be available but it requires mention here because it provides the basis for all that follows. Second, we require information about the prevalence rates at different ages of diseases and other health conditions that place a demand, or should place a demand, on medical services. Evidently, too much detail is to be avoided and the distinctions made should be relevant to planning different kinds of service rather than to a detailed description of morbidity. Third, we require a view of the methods of treatment expected to be adopted at various dates in the future to the extent that the changes envisaged are likely to call for new facilities or for a modification of existing development plans. These steps enable us to build up projections of future demands for facilities and so, finally, we require information about the resources, human and material, at present engaged in the provision of medical services together with information about probable changes in these resources due either to plans for increasing them that have already been adopted or to various forms of wastage.

19.19. To sum up: for this purpose we need to adopt a loose and all-embracing boundary for health services but, within that boundary, we must keep medical details to the minimum consistent with our aim of planning health services.

4. Aetiology and treatment

19.20. In this case the situation is almost exactly the reverse of the one just considered. In the first place, it is necessary to study individual diseases or groups of diseases separately, so that in each case the boundary is drawn tightly round the health conditions, treatments and incapacities associated with particular diseases. In the second place, these states need to be represented in some detail in medical terms since the main contribution that the analysis of sequences can hope to make is in bringing out connections between states that may be widely separated in time. And, in the third place, the main interest in the analysis lies in the structure of the connexions between states rather than in the projection of national or regional aggregates.

19.21. The nature of the problem can be seen as follows. If the states of the system are defined solely in terms of the current situation in which an individual finds himself, then individuals cannot be distinguished according to the path by which any state has been reached. Put another way, the justification for defining states solely in terms of the current situation is that the path by which a state has been reached is irrelevant to the probabilities of movement from that state. Accordingly, if it is believed that the path is relevant, then states cannot suitably be defined as above; instead, they must be defined in terms of combinations of medical categories, past and present.

C. The general state of health

19.22 The aim here is to gather together information on: (*a*) health conditions, (*b*) personal habits and (*c*) environmental circumstances likely to affect health, (*d*) morbidity, (*e*) accident and injury, (*f*) disability, and (*g*) mortality from various causes.

19.23. Group (*a*) includes data on such matters as height, weight and blood pressure. It would also be useful to have information on proneness to allergies.

19.24. Group (*b*) includes data on the adequacy of diet, see chapter XIII above, on the consumption of alcohol and tobacco and on addiction to drugs including tranquillizers and sleeping pills.

19.25. Group (*c*) includes data on housing conditions, see chapter XIV above, and journey to work time, see chapter XV above.

19.26. Group (*d*) includes data on spells of incapacity classified by cause which entitled the sufferer to sickness benefit, see chapter XVI above, data from medical registers relating, for instance, to psychiatric disorders or cancer and notifications of infectious diseases.

19.27. Group (*e*) includes data on industrial accidents and road accidents.

19.28. Group (*f*) relates to data on disability and restricted activity of varying degrees of gravity.

19.29. Group (*g*) relates to data on deaths classified by cause.

19.30. In concluding this section, it may be useful to refer: first, to the World Health Organization (289) on the measurement of levels of health; and, second, to a recent study of the demand for health in Grossman (90). A distinction is drawn there between health and health services which links up with what was said in section B.3 of chapter VI above. Grossman's model is important because it leads to implications that can be tested. He argues that consumers demand, when they purchase medical services, not these services *per se* but rather "good health".

D. The use of health services

19.31. The aim here is to gather together information about the extent that health services are used and the specific purposes for which they are used. This involves both stocks, the numbers in, say, the hospital system at a certain date, and flows, the numbers moving in and out of it and between its various branches. Information is also needed on treatments and other acts: vaccination and immunization, mass-radiography, visits to doctors, dentists, visits to and stays in hospitals, therapeutic treatments, operations undertaken and so on.

E. The facilities available for health services

19.32. The provision of medical care requires many forms of manpower and capital equipment.

19.33. The classification of medical manpower is complicated, as can be seen, for instance, from the manpower tables of the United Kingdom Department of Health and Social Security (232). There is a great variety of grades and specializations and, as part-time staff are important in some grades, it is useful to have a measure expressed in whole-time equivalents as well as in numbers.

19.34. Buildings, equipment and apparatus are also very varied In many cases they present problems of classification and measurement. For instance, many hospitals tend to concentrate in a particular area of medical care while not devoting themselves exclusively to it. As time progresses, the area of specialism may gradually change and so, in classifying hospitals, a criterion must be found which is not unduly sensitive to the precise way in which the hospital is used in a particular period of time.

19.35. Again, to take hospitals as an example, size or capacity can hardly be represented in one dimension. For in-patient activities, a convenient measure is given by available staffed beds; but there are out-patient activities to be considered and also the range of medical services which the hospital is equipped to provide.

F. Revenues and expenditures connected with health services

19.36. The manpower, buildings etc. discussed in the preceding section render services which enter into the cost of providing health services and so are relevant to the subject matter of this section. Their role as assets was emphasized above because, generally speaking, they take a long time to train or to construct.

19.37. Accounting data for the health services should be set out on the lines recommended in the SNA as illustrated by the example relating to educa-

tion given in section A of chapter VI above. As far as possible data expressed at constant prices or in physical terms should also be given.

19.38. There is a growing literature on the economics of health services and medical care. It deals in the main with resource allocation and use and with the demand for medical care. It is relevant to the subject matter of this and the two preceding sections partly by providing examples of the kind of information that would be useful and partly by providing examples of ways of using data that are available. Instances of studies in this field are the econometric analyses of the British National Health Service in Feldstein (66) and the collections of papers edited respectively by Hauser (93) and by Fuchs (76).

G. Characteristic classifications

19.39. The main classifications characteristic of health and health services can be set out as follows.

1. Conditions of health

19.40. An important aim of this part of the system is to connect conditions of health with ailments, treatments and incapacity, and so a classification of health conditions is needed despite the difficulty of formulating one which is simple and manageable in practice and at the same time analytically useful. There would appear to be two approaches to this problem: the attempt to enumerate degrees of health in a general way; and the attempt to enumerate health conditions predisposing to specific diseases or groups of diseases.

19.41. As regards the first approach, Stocks (193) suggested that the following general groupings might be useful:

(*a*) Healthy, that is free from any defect;

(*b*) Healthy apart from a congenital defect producing no appreciable disability;

(*c*) Carrying scars or deformities left by past illness or injury, which do not now cause appreciable disability;

(*d*) Affected by latent or early disease not yet causing the subject to suffer either symptoms of illness or appreciable restriction of activities imposed by its discovery;

(*e*) Ill, that is suffering from one or more of the ailments set out in the *Manual of the International Statistical Classification of Diseases, Injuries and Causes of Death,* World Health Organization (291). Anything requiring treatment, however trivial, would be classified as illness as also would convalescence as long as incapacity continues.

19.42. Some of these categories, and in particular the last, are fairly heterogeneous. For many purposes it would be desirable to separate minor ailments of a transient nature from illnesses of a chronic or acute form. Logan and Brooke (129) suggest the following classification of the severity of illness depending largely on the expected risk of death and the normal period of incapacity:

(*a*) Serious illness: one which involves considerable risk of death (immediate or delayed) or which produces a total incapacity to work of four weeks or more;

(*b*) Moderate illness: one which does not generally involve the risk of death but usually produces 7 to 27 days of incapacity;

(*c*) Mild illness: as under (*b*) but usually producing from 3 to 6 days of incapacity;

(*d*) Minor illness: as under (*b*) but usually producing from 0 to 2 days of incapacity;

(*e*) Symptoms: conditions without more definite diagnosis, producing up to a month of incapacity.

19.43. The authors comment on the difficulties of applying this classification, pointing out that the severity of an illness can only be measured in terms of some outward manifestation. A similar emphasis on the problem of formulating objective criteria is given by Bennett, Garrad and Halil (24) in their study of chronic disease and disability.

19.44. The second approach, namely the enumeration of predisposing conditions, also sets out to relate illness at one stage of life with objectively defined health conditions at earlier stages. In this case, however, the approach is a partial one, conditions being recorded which are believed to be associated with a particular disease or group of diseases.

19.45. Various examples can be given. For instance, continued obesity would seem to be associated with certain forms of heart disease and obesity itself may lead to difficulties in treatment, surgical and other, in sufferers from quite different diseases. Addiction to drugs, alcohol and tobacco are recognized as capable of leading to serious illnesses. Allergies, which may be no more than a nuisance in youth, may predispose the sufferer to severe and even fatal illness in later life. Various inherited defects may prove to be the Achilles heel of otherwise healthy individuals.

19.46. The sequence approach is ideally suited to making these connections; the problem is to collect the necessary data. In order to see the differential effect of the presence or absence of earlier conditions on later illness, it is necessary to define states in terms of cumulative combinations of medical categories as indicated in section B.4 above. This implies longitudinal data since we must know the state an individual was in at earlier stages in order to be able to classify him at later stages. It does not necessarily imply that the information must be collected sequentially from the individual since it might be obtained by record linkage or, if a simple, ordinal set of categories could be used, by retrospective questionnaire.

2. Diseases

19.47. A detailed classification of diseases is available from the World Health Organization (291) which also contains a number of shorter lists obtained by grouping diseases. For present purposes, short lists and groupings are essential and an example of one adopted in an extensive survey of the use of health services is given in Ashford and Pearson (11).

3. Treatments

19.48. These range from obtaining pharmaceutical products from a chemist for self treatment, through diagnosis and treatment by a doctor to in-patient treatment in a hospital. At each step in this range, the treatment will vary depending on the nature of the ailment, the state of medical knowledge and the attitudes of the patient and his doctor. Treatments are far from unique, and for some ailments a range of possibilities is available.

4. Incapacity

19.49. This classification is intended to indicate the extent to which individuals can undertake the activities of normal life and the amount of assistance they need to make their participation possible. Thus an individual may be restricted in the kind of work he can do; to perform this work he may need certain kinds of assistance or he may be unable to work at all. This type of classification is useful in studying participation in the labour force and also in reviewing social services designed to help the disabled. The numbers involved are not small; as Bennett, Garrad and Halil (24) showed in their study of North Lambeth, about eight per cent of the population over the age of 15 is chronically disabled. This degree of incapacity is defined in terms of the inability to perform unaided one or more of the functions essential to daily life.

5. Medical practitioners, nurses and other staff, and their specializations

19.50. This classification is, in the main, an occupational classification in which allowance has to be made for the possible specialization of physicians, surgeons and dentists in particular. This is recognized in ISCO, by the International Labour Office (111), in which medical, dental, veterinary and related workers appear in minor groups 0–6 and 0–7. Of course workers attached to medical establishments may appear in a great many places in ISCO; for instance, ambulance drivers appear among other motor vehicle drivers in category 9–85•90 and ambulance men appear among nursing aids in category 5–99•40.

19.51. The question of industrial status can also arise since some medical practitioners are own-account workers or members of partnerships and others are employees.

6. Medical establishments

19.52. The classification of establishments, of which hospitals are the main but by no means the only example, can be based on a variety of criteria. In the treatment of hospital statistics by the World Health Organization (290) reference is made to the following possibilities: sector of ownership; durations of diseases for which provision is principally made; age range of patients mainly provided for; size of area served; and type of condition attended.

19.53. As an example, the classification of hospitals used in Britain is given by the United Kingdom Ministry of Health (236). In this classification, hospitals are allocated to nineteen categories, primarily, by the kind of case with which they mainly deal (acute, maternity, psychiatric, etc.) and, secondarily, by the proportion of beds allocated to other purposes. Experience shows that the use of fixed, precise proportions leads to a certain number of undesirable changes of category from year to year, so that a more flexible secondary criterion is desirable.

19.54. An interesting kind of classification is given in Baldwin (15). This is a study of psychiatric services in north-east Scotland and is concerned, among other things, with the role of in-patient treatment in mental hospitals in the whole range of treatments applicable to patients suffering from psychiatric disorders. One method used in this study is to set up an input-output system for psychiatric patients and to trace the movements of these patients in and out of the system and between its various branches.The system itself consists of nine branches: out-patients, in-patients, day-patients, domiciliary visits, domiciliary treatment, hospital consultations, other emergencies, in-patient follow-up and other psychiatric. Movement within the system is measured by the number of patients referred from one branch to another. Primary inputs into the branches of the system arise from referrals by categories termed general practitioners, other medical and non-medical; and final outputs from the branches of the system arise from referrals by these branches to one of the same three outside categories.

19.55. This example has been presented as an instance of an institutional classification since it is concerned with the flows of patients between different branches of the psychiatric services. But it could reasonably be argued that it is at the same time a classification by treatment, these being defined in institutional rather than medical terms.

H. Recommended series

19.56. The items of data, classifications and social indicators in respect of health and health services are set out in table 19.1 below.

19.57. As can be seen, table 19.1 is divided into four panels relating to: the general state of health; the use of health services; the facilities available for health services; and revenues and expenditures connected with health services.

19.58. The items of data in the first panel relate to a variety of health conditions, ranging from simple physical measures like height and weight, through consumption habits and living conditions to disability and death.

19.59. The items of data in the second panel relate to preventive medicine, consultations, the use of hospitals (and similar establishments) and their special facilities and waiting lists for admission to them.

19.60. The items of data in the third panel relate to medical manpower and establishments.

19.61. The items of data in the fourth panel relate to revenues and expenditures, inputs and, where possible, outputs of different branches of the health services and to personal expenditure on these services.

1. Indicators connected with the general state of health

19.62. Height and weight, for given age and sex, though variable within and between ethnic groups, are responsive to the quantity and quality of food consumed. The dispersion of their ratio indicates the extent to which individuals depart from the norm of their society or group.

19.63. The consumption of specified nutrients provides indications of the quantity and quality of diets which can be compared with norms appropriate to different climatic and occupational circumstances.

19.64. The consumption of alcohol, tobacco and specified drugs indicates the extent to which these potentially deleterious items of consumption are important in a society or group.

19.65. The proportion of the population living in substandard housing or involved in long journeys to work indicates the importance of two factors which are likely to contribute to the strain and tension of living.

Table 19.1. Health and health services: items of data, classifications and social indicators

Items of data	*Characteristic classifications*	*Other classifications*	*Social indicators*
		A. The general state of health	
(*a*) Health conditions			
1. Number of persons of a given height, weight, blood-pressure and other physical characteristics relevant to health		Age, sex, geographical area, urban or rural area, national or ethnic origin, socio-economic class, size of available household income	Average height Average weight
2. Number of persons with a given intake of nutrients, alcohol, tobacco and specified drugs		as above	Average consumption of specified nutrients Average consumption of alcohol Average consumption of tobacco Average consumption of specified drugs
3. Number of persons living under specified housing conditions and journey to work times		as above	Proportion of the population living in substandard housing Proportion of the population whose journey to work exceeds one hour
4. Number of persons subject to varying spells of incapacity and also recorded in psychiatric, cancer or other medical registers		as above	Average number of days of incapacity in the year Proportion of the population recorded in different medical registers
5. Number of persons encountering industrial, road or other recorded accidents		as above	Proportion of the population involved in industrial, road or other recorded accidents
6. Number of persons suffering from disability and restricted activity of varying degrees of gravity		as above	Proportion of the population suffering from defined disabilities
7. Number of persons dying from different causes		as above	Standardized mortality rates for different groups of diseases and other causes of death
		B. The use of health services	
(*a*) Preventive medicine			
1. Number of persons vaccinated, immunized or undergoing radiographic tests		as above	Proportion of population holding a current certificate of vaccination etc.
2. Number of persons holding a current certificate of vaccination etc.		as above	
(*b*) Consultations with medical practitioners		as above	
1. Number of persons visiting doctor, dentist, psychiatrist, other medical practitioner	Injury, disability, category of disease	as above	Proportion of population visiting different types of medical practitioner
2. Number of visits paid to each type of medical practitioner	as above	as above	Number of visits per head of those visiting
(*c*) Outpatients			
1. Number of admissions to outpatient treatment	as above	as above	Ratio of admissions to outpatient treatment to the population
2. Number of persons undergoing outpatient treatment	as above	as above	
3. Number of discharges from outpatient treatment	as above	as above	
4. Number of outpatient visits	as above	as above	
(*d*) Inpatients			
1. Number of admissions to inpatient treatment	as above	as above	Ratio of admissions to inpatient treatment to the population
2. Number of persons undergoing inpatient treatment	as above	as above	Ratio of occupied beds to available staffed beds Average duration of stay Patients treated per year per available staffed beds Proportion of patients using different facilities Ratio of numbers on waiting lists to admissions in preceding year

Table 19.1. Health and health services: items of data, classifications and social indicators (*continued*)

Items of data	*Characteristic classifications*	*Other classifications*	*Social indicators*
	B. The use of health services (continued)		
3. Number of discharges from inpatient treatment	as above	as above	
4. Number of persons dying while undergoing inpatient treatment	as above	as above	
(*e*) Use of special facilities			
1. Numbers using departments, such as surgical departments, and their divisions, such as general surgery, radiotherapy, neurosurgery and so on	as above (add type of treatment)	as above	
2. Units of treatment in radiology, physiotherapy etc.	as above	as above	
(*f*) Waiting lists			
1. Number on waiting list for admission and use of various special facilities	as above	as above	
	C. The facilities available for health services		
(*a*) Medical manpower			
1. New entrants into the various grades of the medical and nursing professions and the accompanying technical and ancillary staffs	Occupation, specialism and type of establishment, if any, to which attached	Age, sex, geographical area, urban or rural area	Ratio of numbers in various grades of the medical and nursing professions to the population
2. Numbers engaged in the above activities	as above	as above	
3. Leavers from the above activities through change of job, retirement, death or other causes	as above	as above	Percentage increase in various grades of medical manpower from year to year
(*b*) Medical establishments			
1. Additions to capacity from new construction or otherwise of hospitals and similar establishments in terms of available staffed beds	Type of establishment	as above (omit age and sex)	Percentage increase in capacity of various types of medical establishment from year to year
2. Capacity of hospitals and similar establishments in terms of available staffed beds	as above	as above	Ratio of available staffed beds in medical establishments to the population
3. Reductions in capacity from demolition or otherwise of hospitals and similar establishments in terms of available staffed beds	as above	as above	
	D. Revenues and expenditures connected with health services		
(*a*) Revenues and expenditures			
1. Money values set out in the accounting form outlined in the SNA	Type of practitioner or establishment	as above (add institutional sector, kind of economic transaction)	Index-number of inputs into health services at constant prices
2. Inputs into and, where possible, outputs of health services measured in physical units or constant prices	as above	as above	
(*b*) Personal expenditure on health services			
1. Consumption expenditure		Geographical area, urban or rural area, national or ethnic origin, socio-economic class, size of available household income	Index-number of personal consumption expenditure on health services at constant prices Ratio of personal expenditure on health services to the total cost of these services
2. Price index number of health services			

19.66. The average number of days of incapacity in the year indicates the extent to which normal life is disrupted by ill-health without reference to its gravity.

19.67. The proportion of the population recorded in different medical registers is intended to indicate the prevalence of certain specific diseases in the population.

19.68. The proportion of the population involved in various types of recorded accident is intended to indicate the contribution of accidents to adverse health conditions.

19.69. The proportion of the population suffering from defined disabilities indicates the prevalence of these disabilities.

19.70. Standardized mortality rates for different diseases and other causes of death indicate their relative importance and the way in which this changes over time.

2. Indicators connected with the use of health services

19.71. The proportion of the population holding current certificates for vaccination etc. indicates the extent of the use of preventive medical measures.

19.72. The proportion of the population visiting (or being visited by) various types of medical practitioner indicates the use of these facilities. Clearly, this is a matter of supply and demand and, therefore, of price.

19.73. Under given conditions of supply and price, the number of visits per head of those visiting is intended to indicate the extent to which the services of medical practitioners are concentrated on a wide or a narrow range of the sick population.

19.74. The ratio of admissions to different forms of treatment to the population indicates the use made of these forms of treatment. If there is adequate capacity, that is to say if waiting lists are small, this type of measure could be said to represent demand at the current price. If this price is zero it could, perhaps, be said to represent need since, presumably, few people would undergo hospital treatment if they were not persuaded that it was necessary.

19.75. The ratio of occupied beds to available staffed beds indicates the extent to which the general facilities of hospitals and similar establishments are used.

19.76. The average duration of stay and the number of patients treated per year per available staffed bed are intended to indicate the extent to which the facilities of hospitals and similar establishments are taken up by cases requiring a long treatment. It has to be recognized that length of stay is influenced by medical opinion which, in recent years, has tended to shorten the length of stay, partly, no doubt, for economic reasons but partly in the interests of the patient.

19.77. The proportion of patients using different facilities is intended to indicate the relative importance of the need for the services of different departments and for different treatments.

19.78. The ratio of the numbers on waiting lists to admissions in the previous year indicates the extent to which capacity is catching up on or falling short of demands.

3. Indicators connected with the facilities available for health services

19.79. The ratio of the numbers in various grades of medical manpower to the population indicates the extent to which there is an adequate supply of medical services as far as manpower is concerned. It is not easy to define adequate nor is it clear that, in countries where the ratio is low, it would be better, in terms of the health of the population, to increase medical manpower rather than to devote equivalent resources to improving the diet or housing conditions.

19.80. The ratio of available staffed beds in medical establishments to the population indicates the extent to which the main physical facility required for medical care in available. This indicator is subject to the same comment as the preceding one.

19.81. The percentage increases from year to year in various grades of medical manpower and in the capacity of various types of medical establishment indicate, in relation to the growth of the population, the extent to which these components of medical care enable existing standards to be maintained.

4. Indicators connected with revenues and expenditures

19.82. An index-number of inputs into health services at constant prices provides the input measure of the output of these services usually adopted in the national accounts. A corresponding output measure of output is not suggested here because it is thought, in the terminology of section B of chapter VI above, that a producer-oriented measure of output, even if it could be constructed, would be of doubtful value and that a consumer-oriented measure would raise many problems that have not yet been solved.

19.83. An index-number of personal consumption expenditure on health services at constant prices indicates the extent to which consumers are willing, if necessary, to obtain these services at their own expense. This indicator will not be easy to interpret if the state plays a changing role in the provision of subsidized health services.

19.84. The ratio of personal expenditure on health services to their total cost indicates the extent to which these services are dependent on personal rather than government initiative.

XX. PUBLIC ORDER AND SAFETY, OFFENDERS AND THEIR VICTIMS

A. Introduction

20.1. As we shall see in the following section, the coverage of public order and safety in the SNA extends beyond what is discussed in this part of the system in as much as it includes fire protection services, the registration of legal titles to property and the activities of the police in controlling traffic as well as civil courts and tribunals in addition to criminal ones.

20.2. Here we shall be concerned with offenders and their victims, the offences they commit, the institutions whose task it is to prevent and detect offences, to try offenders and to carry out the sentences imposed on them, and the predisposing conditions and ultimate consequences to offenders and their victims of criminal activity.

20.3. In the usual table, in paragraph 20.43 below, we shall divide the subject into offences (indictable and non-indictable), persons charged and convicted, persons in centres of detention and on probation, victims, their injuries and their losses, and the facilities, outputs, inputs, revenues and expenditures of institutions of public order and safety.

20.4. Reference will be made to some recent studies which attempt to link criminal activities with their predisposing conditions, either personal or social.

20.5. The remainder of the chapter deals with characteristic classifications and with recommended series and social indicators.

B. Boundaries

20.6. A crime, or criminal offence, may be broadly defined, as in Carvell and Swinfen Green (41), as any "act or omission forbidden by law on pain of punishment". Every year many such offences are committed and many of them, perhaps the majority, go undetected. Of those that are known to the police, many go unresolved and perhaps only a minority are cleared up. Of these perhaps not more than half result in action against actual or supposed malefactors either through cautioning by the police or by proceedings in a criminal court. Offences of different gravity are likely to be handled differently and to involve a complex structure of courts and procedures. After an initial sentence has been passed there will in some cases be a right of appeal.

20.7. The foregoing discussion is restricted to offences recognized by the criminal law, and it is clear from experience that action can only be taken in a minority of the cases known to the police, to say nothing of the total of criminal offences committed. It must also be realized that different individuals and groups will give different weight to different offences and, indeed, will have a concept of delinquency which, at the same time, may fall short of and extend beyond the concept reflected in the criminal law. However desirable it may be to examine alternative concepts of delinquency and to argue for an extension or contraction of the concept currently reflected in the law, it is necessary, for present purposes, to accept the legal concept of criminal offences. This concept has a wide overlap with the alternative, more personal, ones and is the only concept for which a more or less complete information system exists.

20.8. Thus the scope of this part of the system might be defined as relating to offences recognized by the criminal law about which sufficient is known to enable action to be taken, by either the police or the courts, against actual or suspected offenders. But just as in the case of health we were concerned both with conditions predisposing to ill health and with incapacity resulting from it, so in the present case we are concerned with conditions predisposing to criminal acts and with the effect of these acts and their consequences on the lives of those who commit them and those who are their victims.

20.9. Just as there are many diseases, so there are many crimes. It is desirable to be able to study individual diseases or crimes, aggregations of diseases or crimes classified by type, or aggregations classified by gravity. The last distinction may be harder to make in the case of crime than in the case of disease because many crimes encompass a wide variety of acts: an instance is dangerous driving. Most of us have witnessed acts of appallingly dangerous driving which, not having been observed by the police and not having led to an accident, fall outside the boundary suggested above. A far less glaring case which was observed by the police might lead to a criminal prosecution and, if the cause of death, would be recorded as a serious crime.

20.10. Furthermore, it must be recognized that legal systems inevitably work on the basis of a set of highly technical rules and procedures, required, in the first place, in the interests of fairness and, in the second place, in the interests of uniformity. Thus apart from such questions, which it is here suggested must be ignored, as to whether, say, procuring an abortion is a serious offence, there are also questions of what, in law, constitutes procuring an abortion, and what circumstances and evidence are needed to lead, on prosecution, to a verdict of guilty.

20.11. Many aspects of the problem of measuring delinquency are discussed in Sellin and Wolfgang (185).

20.12. The main institutions relevant to this sequence are the police, the criminal courts and the centres of detention: prisons, borstal institutions, remand homes, approved schools and so on.

20.13. As we saw at the beginning of this chapter the government purposes falling under the heading public order and safety cover a somewhat wider ground than those included here. In the SNA (255, p. 87) they are described as follows:

> "Administration and research connected with the maintenance of internal order; law courts; police; fire protection; prisons and other places of detention and correction. Covers all outlays on law courts and the judicial system, including general legal tribunals and related organizations in charge of parole and probation activities and the registration of legal titles

to property; transfer payments for legal aid to households and private non-profit institutions; expenditure on police activities including traffic control; expenditure for the operation, upkeep and new construction of prisons and other places of detention and correction, such as criminal asylums, reformatories and reform schools."

C. Offences

20.14. The usual point of departure concerns offences known to the police since very little can be said about other offences. A classification of this total by type of offence provides the most complete picture of the composition of offences.

20.15. Apart from a classification by the nature of the offence, a division is usually given between more serious and less serious offences, indictable and non-indictable offences in the British terminology. There may also be an intermediate category termed hybrid offences whose classification depends on the type of court in which they are tried. The purpose of this arrangement is to give greater flexibility in sentencing in cases, such as the more serious motoring offences, in which the act committed may vary widely in gravity.

20.16. It may only be thought necessary to classify the more serious offences known to the police. This is the case in Britain.

20.17. The second stage in the recording of offences is to enumerate and classify those that have been cleared up. Offences cleared up include those for which a person is arrested or summoned, or for which he is cautioned, those taken into consideration by a court when the offender is found guilty on another charge, and certain of those of which a person is known or suspected to be guilty but for which he cannot for some reason (such as death) be prosecuted. In England and Wales the proportion of indictable offences cleared up has been, in recent years, around 45 per cent of the indictable offences known to the police.

20.18. This is as far as we can go in the enumeration and classification of offences. As we move on to legal proceedings, it is offenders rather than offences that are enumerated and classified. This matter forms the subject of the following section.

D. Persons cautioned, charged and convicted

20.19. In the first instance an offender may either be cautioned by the police or be charged with an offence and proceeded against in an appropriate form of court. From the United Kingdom Home Office (235) it can be seen that in England and Wales in 1968 about 10 per cent of offenders committing indictable offences were cautioned and the remainder were proceeded against.

20.20. In the course of judicial proceedings, the charge may be withdrawn or dismissed, the offender may be discharged, acquitted or otherwise found not guilty, or he may be found guilty.

20.21. Offenders found guilty may be discharged at this stage, put on probation, fined, imprisoned or otherwise dealt with.

20.22. Judicial proceedings inevitably take time and this may be increased by regulations designed to safeguard the interests of offenders. It may also be increased by a lack of balance between court facilities and the number of cases to be tried. Since avoidable delay is obviously undesirable, information should be collected about the time-lag between the date at which a charge is made and the date at which the charge is disposed of.

E. Persons in centres of detention and on probation

20.23. Centres of detention consist, in addition to prisons, of a number of establishments mainly designed for youthful offenders: in British terminology, Borstal institutions, remand homes, approved schools and so on.

20.24. Centres of detention contain, in addition to sentenced offenders a number of other categories of individual. For instance, in the case of prisons, there will be some as yet untried for a criminal offence, some convicted but awaiting sentence or inquiry and some civil offenders. These categories are likely to form a small proportion of the prison population at any given date but a comparatively large proportion of the admissions in any given period.

20.25. Persons placed on probation are included here because while they are at liberty, possibly subject to certain conditions, for the time being, they are liable, in the event of their commiting another offence, to be punished for the offence which led to their being placed on probation as well as for the later offence.

F. Victims, their injuries and their losses

20.26. Criminal statistics usually provide little information about victims and, as a consequence, relatively little is known about the groups in society which mainly suffer from criminal activities or about the degree of their injuries or the extent of their losses. It should not be too difficult to repair this gap even at the level of offences known to the police; indeed, in the case of certain offences against property, an example of this is given by the United Kingdom Central Statistical Office (226, No. 3, table 140).

G. Facilities etc. for public order and safety

20.27. Finally, under this heading, the physical and financial inputs and outputs of institutions concerned with public order and safety are brought together.

H. Criminal activities and their predisposing conditions

20.28. A number of recent studies have been made on the links between delinquency and various factors, personal or circumstantial, which may act as predisposing conditions.

20.29. In West (278) a first report is given on the Cambridge study of delinquent behaviour which is concerned with boys aged 8 to 16 and relates the onset of delinquency to school performance and to family and personal histories.

20.30. Wolfgang, Figlio and Sellin (286) contains a study of the careers between the ages of 10 and 18, of approximately 10,000 Philadelphia boys born in 1945. Many factors, such as socio-economic status and race, are dealt with and the size of the sample makes it possible to apply models of the type described in chapter VII above both to offence transitions and to age transitions.

20.31. Flynn, Flynn and Mellor (70) adopt a different and less personal approach to essentially the same problem, which they term social malaise research.

This method consists of working out the correlations between criminal, economic, educational, health and social variables and then by means of various techniques, such as cluster analysis and principal components analysis, finding out the main linkages by which the whole set of variables is connected.

20.32. Although not strictly relevant to the subject of this section, it is of interest that in Wilkins (280) a number of papers are brought together on the use of mathematical models in the study of delinquency.

I. Characteristic classifications

20.33. If we are to be able to trace the development of criminal behaviour through life and the consequences of this behaviour for the individuals concerned, we shall need a similar set of classifications to those suggested in the case of health. The general picture seems to be as follows. A small minority of the population, usually of a predisposing temperament and living in a predisposing environment, are much more likely than others to become involved in early juvenile delinquency. Of all those who do become involved, some learn their lesson and manage to pull out of a life of crime whereas others tend to become more deeply involved in it, eventually becoming habitual criminals and usually ending by making great demands on public assistance, welfare and psychiatric services. The treatment of offenders has as its principal aim the diminution of the likelihood of a return to delinquency, an aim which probably calls for a differential treatment of offenders.

20.34. In the light of this discussion, the following classifications are proposed.

1. Early-warning indicators

20.35. These play a similar role to the predisposing conditions discussed, in connection with health, in section C.1 of chapter XIX. West (278) discussed the characteristics of boys identified at an early age as troublesome individuals: truancy, laziness, aggressiveness, lying, stealing, destructiveness and many others. He relied on two sources in his attempt to measure early misconduct: class teachers and psychiatric social workers. He showed that the minority of boys identified as being particularly badly behaved at age 8 to 9 showed a greatly increased liability to juvenile court appearance under the age of 14; and further that assessments reached at age 8 tended to be confirmed by a new set of teachers at age 11. He found that troublesome conduct is positively correlated with almost every adverse item, whether of the boy himself or of his background.

2. Offences

20.36. A detailed classification of offences is used for statistical purposes but there is also need for a shorter list obtained by grouping offences. For instance, in England and Wales, indictable offences are grouped into six classes while for non-indictable offences the only group shown separately relates to motoring offences.

3. Gravity of offence

20.37. Categories of offence can be put in an order of gravity: as we have seen, motoring offences range from trivial parking offences to highly dangerous driving resulting in death. In Scotland a distinction between crimes and offences is made in presenting statistics much as the distinction between indictable and non-indictable offences is made in England and Wales. It might be useful to go beyond this simple dichotomy and recognize a number of categories of gravity. The weighting problems involved in establishing an index of delinquency have been discussed in Sellin and Wolfgang (185).

4. Treatment of offenders

20.38. Treatments cover a wide range, a range which varies from age to age or at any rate between juveniles and adults. For instance, in England and Wales, prison sentences are only imposed on individuals over the age of 16, but below that age there are a number of institutions to which a guilty individual can be committed. Further, there are different types of prison, and prison sentences differ in more characteristics than length. It must also be recognized that the sentence initially imposed may not only be varied on appeal but may also be in part remitted, as a consequence, for instance, of the offender's good conduct.

5. Institutions

20.39. In this part of the system we are mainly concerned with the police, the criminal courts, prisons and similar institutions, including certain psychiatric institutions. It is desirable not only to classify these institutions but also to distinguish between their main activities which may not be separately institutionalized. For instance: the police are concerned with the regulation of traffic as well as with crime; prisons contain non-criminals as well as criminal prisoners.

6. Incapacity

20.40. This term, which is not as appropriate in this context as it was in the case of health, is intended to relate to the states in which offenders, and especially habitual offenders, are found after they have served their sentence. Many return to normal life but a substantial number become more and more enmeshed with the prison system, with psychiatric and welfare services and with organizations of all kinds that provide assistance for those who become increasingly incapable of organizing their lives.

7. Victims

20.41. Different offences are directed against different kinds of victim and it would be useful to know about the characteristics of victims as well as about the characteristics of offenders.

8. Loss, damage and injury

20.42. This is also a matter on which little is normally recorded. Information about it would help to clarify the picture of the changing nature of crime. It would have to be recognized that potential victims are likely to respond to changing criminal practices. For instance, if street robbery becomes more prevalent, pedestrians are likely to carry less cash around with them; but it may not be advisable to carry none, since in that case the criminal may substitute a personal injury for his intended theft.

J. Recommended series

20.43. The items of data, classifications and social indicators in respect of public order and safety, offenders and their victims are set out in table 20.1 below.

Table 20.1. Public order and safety, offenders and their victims: items of data, classifications and social indicators

Items of data	*Characteristic classifications*	*Other classifications*	*Social indicators*
		A. Offences	
(*a*) Offences			
1. Number known to the police	Indictable/non-indictable, type of offence, gravity of offence	Geographical area, urban or rural area	Number of offences known to the police per 100,000 of the population Ratio of indictable offences against the person to all indictable offences Average gravity of indictable offences
2. Number cleared up	as above	as above	Number of offences cleared up per 100,000 of the population Ratio of indictable offences cleared up to all offences cleared up
		B. Persons cautioned, charged and convicted	
(*a*) Persons cautioned, charged and convicted			
1. Number cautioned	as above	as above (add age, sex, national or ethnic origin, socio-economic class)	
2. Number charged	as above	as above	Ratio of numbers cautioned to numbers cautioned and charged
3. Number convicted	as above (add number of convictions to date, nature of sentence)	as above	Ratio of numbers convicted to numbers charged Average number of convictions to date per convicted offender Ratio of suspended prison sentences to all prison sentences
		C. Persons in centres of detention and on probation	
(*a*) Persons in centres of detention			
1. Admissions of sentenced offenders	For individuals: as above	as above	Ratio of sentenced offenders to all inmates
2. Admission of other categories of individual	For institutions: type	as above	Average length of term in respect of those sentenced to prison or other centre of detention
3. Number of sentenced offenders in centres of detention	as above	as above	
4. Number of others in centres of detention		as above	
5. Number of sentenced offenders leaving centres of detention	as above	as above	Average length of term actually served
6. Number of others leaving centres of detention		as above	
(*b*) Persons on probation			
1. Number entering a period of probation	as, for individuals, above	as above	
2. Number on probation	as above	as above	
3. Number released from a period of probation	as above	as above	Average period of probation
		D. Victims, their injuries and their losses	
(*a*) Victims			
1. Number of human victims	as above	as above	Number of human victims per 100,000 of the population
2. Number of institutional victims	as above	Institutional sector, kind of economic activity	Number of institutional victims per 100,000 of the population
(*b*) Injuries			
1. Number of injuries	as above (add severity of injury)	For victims: as for human victims above	Average gravity of injuries
(*c*) Losses			
1. Number of losses to human victims	as above (add amount of loss; omit severity of injury)	as above	Average value of losses to human victims
2. Number of losses to institutional victims	as above	Institutional sector, kind of economic activity	Average value of losses to institutional victims

Table 20.1. Public order and safety, offenders and their victims: items of data, classifications and social indicators

(continued)

Items of data	*Characteristic classifications*	*Other classifications*	*Social indicators*
	E. Facilities etc. for public order and safety		
(*a*) Manpower			
1. Number employed in police departments, institutions of criminal justice, centres of detention etc.	Type of institution	Age, sex, geographical area, urban or rural area, occupation	Numbers employed in different branches per 100,000 of the population
2. Number of voluntary workers, such as magistrates, connected with public order and safety	as above	as above	
3. Number of full-time equivalents engaged on duties connected with public order and safety	as above		Number of full-time equivalents in different branches per 100,000 of the population
(*b*) Use of time			Proportion of time spent in different branches on duties connected with public order and safety
1. Time taken in clearing up offences	Indictable/non-indictable, type of offence		Average time taken in clearing up offences
2. Time taken in judicial proceedings	as above		Average time taken in judicial proceedings
3. Time taken between making charges and disposing of them	as above		Average time taken between making a charge and disposing of it
(*c*) Capacity of centres of detention			
1. Number of cells or rooms	Type of institution	Geographical area	Average number of inmates per cell or room
(*d*) Revenues and expenditures arising in institutions of public order and safety			
1. Money values set out in the accounting form outlined in the SNA	as above	Institutional sector, kind of economic transaction	
2. Inputs and, where possible, outputs measured in physical units or at constant prices	as above		Index-number of inputs connected with public order and safety at constant prices

20.44. As can be seen, table 20.1 is divided into five panels relating to: offences; persons cautioned, charged and convicted; persons in centres of detention and on probation; victims, their injuries and their losses; and facilities etc. for public order and safety.

20.45. The items of data in the first panel relate to the number of offences known to the police and the number of offences cleared up.

20.46. The items of data in the second panel relate to the number of persons cautioned, charged and convicted.

20.47. The items of data in the third panel relate to the number of admissions to, inmates of and releases from prisons and other centres of detention and the number of persons entering, on and released from a period of probation.

20.48. The items of data in the fourth panel relate to human and institutional victims and the injuries and losses they suffer.

20.49. The items of data in the fifth panel relate to manpower connected with public order and safety, the time taken to carry out different stages of the work, the capacity of centres of detention and the revenues and expenditures connected with public order and safety.

1. Indicators connected with offences

20.50. The number of offences known to the police in relation to the population provides the fullest measure available of the extent of crime.

20.51. The number of offences cleared up in relation to the population indicates the extent to which it is possible to account for known crimes.

20.52. The ratio of indictable offences cleared up to all offences cleared up indicates the relative importance of serious offences.

20.53. The ratio of indictable offences against the person to all indictable offences indicates the relative importance of homicide, assault, injury etc. in comparison with other offences.

20.54. The average gravity of indictable offences is intended to indicate whether crime is changing in gravity as well as in quantity.

2. Indicators connected with persons cautioned, charged and convicted

20.55. The ratio of the numbers cautioned to the numbers cautioned and charged indicates the extent to which offenders are not proceeded against to the point of judicial proceedings.

20.56. The ratio of the numbers convicted to the numbers charged indicates the extent to which charges are upheld in judicial proceedings.

20.57. The average number of convictions to date per convicted offender throws some light on the phenomenon of recidivism.

20.58. The ratio of suspended prison sentences to all prison sentences indicates the extent to which prison sentences are not enforced unless another conviction is made within a stated period.

3. Indicators connected with persons in centres of detention and on probation

20.59. The ratio of sentenced offenders to all inmates indicates the extent to which the capacity of centres of detention is used for other purposes.

20.60. The average length of term in respect of those sentenced to prison or other centre of detention throws some light on the judicial assessment of the offence and the offender. This measure is likely to be affected by the introduction of new methods of treating offenders, such as the suspended sentence.

20.61. The average length of term actually served, when compared with the average length imposed in the initial sentence, indicates the extent to which sentences tend, in part, to be remitted.

20.62. The average period of probation indicates the way in which this method of treatment is used. The same calculation could be made with respect to suspended sentences.

4. Indicators connected with victims, their injuries and their losses

20.63. The number of human and institutional victims in relation to the population provides an alternative indication of the extent of crime even if the offences in question cannot be cleared up.

20.64. The average gravity of injuries is an indication of the seriousness of crimes against the person.

20.65. The average value of losses to human and to institutional victims is an indication of the seriousness of crimes against property.

5. Indicators connected with facilities etc. for public order and safety

20.66. The numbers employed and full-time equivalents in different branches in relation to the population indicate the relative importance of these branches as users of manpower.

20.67. The proportion of time spent in different branches on duties connected with public order and safety indicates the extent to which these branches have other duties to perform.

20.68. The average times taken in various stages between the knowledge of an offence and the final disposition of it indicates the speed with which different branches connected with law and order work.

20.69. The average number of inmates per cell or room provides some indication of the extent to which the capacity of centres of detention is adequate.

20.70. An index-number of inputs into the different branches connected with public order and safety provides the input measure of output of these services usually adopted in the national accounts.

Part Three. Examples and Applications

XXI. THE CONTENT OF PART THREE

A. Introduction

21.1. The aim of this part of the report is to exemplify and illustrate numerically some of the main uses of the system and, in particular, those parts of it which require the collection of new kinds of data. The more elaborate a system becomes the more difficult it is to justify it in detail solely by reference to general principles, as can be seen from the experience with the system of national economic accounts. When the first standard systems were formulated in the decade following the Second World War (157, 252) distinctions such as those between production, consumption and accumulation or between current and capital transactions, based on general economic and accounting principles, sufficed to provide a coherent framework for the simple structures proposed. With the elaboration of these structures, as in the revised SNA (255), to include input-output and flow-of-funds data, an appeal to more than general principles became necessary. It was intended, for instance, that the new system should provide a basis for input-output analysis and so, in recommending data on production, attention had to be paid to the experience that had already been gained on the best means of constructing analytically useful tables; and an indication was given of what could be done with the data recommended.

B. Reasons for providing examples in the present case

21.2. In the first place, the present report, with its emphasis on connectedness, flows and longitudinal data, makes considerable demands in respect of statistics to be collected and so it is desirable to show what can be achieved by the work entailed. This is particularly so since, in the present context, the development of models with the help of mathematics has increased greatly in the past decade and may not as yet be widely known.

21.3. In the second place, it is interesting to see in what areas it has been possible to make the kind of analyses described in this report and what kinds of data have been used. The system described in the first two parts does not require the introduction of an individualized data system for its realization although, as was stated in chapter IV, such a source of data can, in principle, be regarded as the ideal. But an I-D system poses many problems and is not likely to be introduced universally in the near future. In the meantime other sources can be used as was suggested in chapter IV. Many writers who deplore the lack of flow-data indicate how existing methods could be modified to enable them to be collected.

21.4. In the third place, examples help to underline the essential unity of the system while recognizing the specific problems that are encountered in different fields of application.

21.5. In the fourth place, at a more technical level, examples help to bring out the conceptual and taxonomic problems that are commonly encountered and which a well-designed system of statistics should meet as far as possible.

21.6. Finally, examples help to clarify the role that new data and new methods can reasonably be expected to play in the formulation of policy. At present, attitudes to decision-making are undergoing radical changes in many fields: it is recognized that there is a limit to what can be expected of the flair and hunch of even experienced individuals in dealing with a complex system. Hence there is a demand for more formal, penetrating and communicable analyses. But if this desirable change in attitude is to accelerate and not retard the achievement of desirable aims, it is necessary to be as clear as possible about what can be expected now from the new data and analytical methods as opposed to what can be expected from them a generation or two hence when they have been perfected or at least improved.

C. The chapters which follow

21.7. The chapters which follow are arranged in the order of those in part Two and so each brings together examples relevant to a part of the system. A chapter may provide an opportunity for describing data, techniques or analyses and no attempt is made to illustrate all these aspects of the subject in each chapter. Where possible, examples are given which illustrate connexions between different parts of the system. In presenting these examples it would have been possible to invert the roles of subsystems and problem areas: to have chapters concerned, say, with the physically disabled or the aged poor rather than with health or the distribution of income. But since the possibilities of this kind of inversion within the system are obvious, it seems more convenient for present purposes to repeat the order adopted in part Two.

21.8. The chapters are divided into sections each of which provides one or more examples on a particular topic. The examples used are not the result of a relentless search of the literature and are not intended to provide a complete survey of applications in the different fields. In short, they are illustrative, not exhaustive.

XXII. EXAMPLES RELATING TO THE SIZE AND STRUCTURE OF THE POPULATION, BIRTHS, DEATHS AND MIGRATION

A. Introduction

22.1. A knowledge of the size and structure of the population, the factors making for change and the changes that are likely to take place in the future occupies a central place in this report.

22.2. The problems involved in acquiring reliable information in this area are discussed historically from British experience in Glass (82); and the two collections of historical reprints contained in Glass (83, 84) are also of interest.

22.3. Many aspects of population models are discussed and illustrated in Keyfitz (121); and deterministic and stochastic models based on both a continuous and a discrete treatment of time are presented in Pollard (166).

22.4. Insight into the influence of changes in fertility and mortality on the growth and stability of a population can be gained by decomposing the fertility and survival matrix (of which a simplified and incomplete example was given in table 3.1 above) in terms of its characteristic roots and vectors. An example of this type of analysis, based on Keyfitz (120) is given below.

22.5. A summary measure of the reproductive power of a population is provided by the gross (or better still net) reproduction rate; and summary measures of the influence of mortality are provided by the expectation of life at birth or at later ages, which can be calculated from a life table. These measures have been provided for a large number of countries by the United Nations since 1948 (251). A wide range of life table calculations are presented in Preston, Keyfitz and Schoen (171). A curvilinear relationship between the expectation of life at birth and the GNP per head has been noted on several occasions, for instance in McGranahan and others (135) and in Stone (206).

22.6. One of the main practical tasks of demographic analysis is to provide population projections. If all that is required is the future size of the population, estimates could be made by fitting some form of growth curve to statistics of population numbers. A sigmoid curve, with lower and upper asymptotes, is usually considered appropriate, and many calculations have been made with the logistic curve, introduced in Verhulst (271) and independently discovered some 80 years later by Pearl and Reed (163). In this formulation the size of a population is expressed as a function of time, and so it can be regarded as a form of trend analysis; on the other hand, the logistic curve can be derived from the assumption that a population would grow at a constant rate but for the action of a retarding force proportional to its size. In practice, however, it has been usual to find that a logistic curve, while fitting past observations closely, gives an upper bound which is exceeded a few decades after the calculations have been made.

22.7. In order to reach a more satisfactory base for projections it is necessary to examine the changes that have taken place in the relevant demographic factors, in particular in age-specific fertility and mortality, and to consider how they are likely to vary in the future. Allowance must also be made for migratory movements, which are usually somewhat unpredictable. Migration models are discussed in Keyfitz (121) and in Wilson (285). Thus actual projections are based on disaggregated data and embody changing relationships whether or not a formalized model is used.

22.8. The assessment of world population prospects in the year 2000 made by the United Nations in 1963 (247) was mentioned in section B of chapter II above. This study was repeated in 1968 (248). Still more recently a detailed analysis of world population growth has been provided in Frejka (73). These works bring out two points very clearly: (*a*) regional differences are so great that it is necessary to build up the world picture by aggregating the results for different countries and regions; and (*b*) so many uncertainties exist that it is desirable to present projections based on alternative assumptions rather than a single series of projections based on what are deemed to be the most likely assumptions at the moment.

B. The matrix of fertility and survival

22.9. This type of matrix, exemplified by table 3.1 above, provides the basis for a simple population model in which migration is ignored. If we denote such a matrix by A we can write $A \equiv B + C$, where B relates to the fertility rates appearing in the first row of A and C relates to the survival rates appearing in the subdiagonal of A. This C-matrix is the same as the C-matrix of the open models described in section C of chapter VII above, but it is the simplest possible version in that the only possible change of state is the transition from one age group to the next.

22.10. Table 3.1 relates to the female population only. If we denote males and females by the suffixes m and f, then we can write

$$\begin{aligned} \Delta \mathbf{n}_f &= A_f \mathbf{n}_f \\ &= B_f \mathbf{n}_f + C_f \mathbf{n}_f \end{aligned} \qquad \text{(XXII.1)}$$

and

$$\Delta \mathbf{n}_m = B_m \mathbf{n}_f + C_m \mathbf{n}_m \qquad \text{(XXII.2)}$$

where $\mathbf{n}_m$ and $\mathbf{n}_f$ denote respectively the male and female age-composition vectors in some initial or base period. If we assume that the coefficient matrices, B_f, C_f, B_m and C_m, are constant then we can write

$$\begin{aligned} \Delta^\tau \mathbf{n} &= A_f{}^\tau \mathbf{n}_f \\ &= C_f{}^\tau \mathbf{n}_f + \sum_{\theta=0}^{\tau-1} C_f{}^{\tau-\theta-1} B_f A_f{}^\theta \mathbf{n}_f \end{aligned} \qquad \text{(XXII.3)}$$

and

$$\Delta^\tau \mathbf{n}_m = C_m{}^\tau \mathbf{n}_m + \sum_{\theta=0}^{\tau-1} C_m{}^{\tau-\theta-1} B_m A_f{}^\theta \mathbf{n}_f \qquad \text{(XXII.4)}$$

In the second row of (XXII.3) and in (XXII.4) the age-composition vectors consist of two terms, the first of which shows the survivors from the initial stock and the second of which shows the surviving new entrants (births) from all later periods. Since the C-matrices are lower triangular, the first term on the right-hand sides of (XXII.3) and (XXII.4) is zero for all values of τ which exceed the human life span.

22.11. If migration can be ignored and if it is thought that the elements of the A-matrices will remain constant, then (XXII.3) and (XXII.4) can be used to make projections. If the A-matrices are expected to change, then the model must be reformulated on the lines set out in section C.1 of chapter VII above.

22.12. Another use for the A-matrices, in which their constancy is simply assumed, is to study the implications of the present structure of the population. Let us now turn to some examples.

C. One thousand girls and their progeny

22.13. In Keyfitz (119) several A-matrices are given for the United States and Mexico. These matrices relate to females grouped into nine five-year age groups spanning the ages 0 through 44. The 1960 matrix for the United States is

$$A = \begin{bmatrix} 0 & 0 & 0.1068 & 0.4135 & 0.5416 & 0.3686 & 0.2007 & 0.0862 & 0.0195 \\ 0.99633 & 0 & 0 & 0 & 0 & 0 & 0 & 0 & 0 \\ 0 & 0.99829 & 0 & 0 & 0 & 0 & 0 & 0 & 0 \\ 0 & 0 & 0.99789 & 0 & 0 & 0 & 0 & 0 & 0 \\ 0 & 0 & 0 & 0.99689 & 0 & 0 & 0 & 0 & 0 \\ 0 & 0 & 0 & 0 & 0.99606 & 0 & 0 & 0 & 0 \\ 0 & 0 & 0 & 0 & 0 & 0.99477 & 0 & 0 & 0 \\ 0 & 0 & 0 & 0 & 0 & 0 & 0.99253 & 0 & 0 \\ 0 & 0 & 0 & 0 & 0 & 0 & 0 & 0.98867 & 0 \end{bmatrix} \qquad \text{(XXII.5)}$$

where the suffix f is omitted since in this analysis we shall not be concerned with males. If we raise this matrix to successive powers, concentrate on the first column of the resulting matrices and multiply the elements of each of these columns by 1,000, we shall obtain at 5-year intervals estimates of the survivors of 1,000 girls, aged 0-4 in year 0, plus their female progeny, classified by age group. The result of summing these numbers at 25-year intervals is shown in table 22.1 together with the corresponding calculations based on a 1940 matrix for the United States and a 1960 matrix for Mexico.

Table 22.1. Progression to the end of the child-bearing ages of 1,000 girls under 5 in year 0 and their female progeny over a span of 100 years for three different fertility and survival matrices

(Numbers)

Fertility and survival matrix	0	25	50	75	100
U.S., 1940	1000	1527	1459	1631	1724
U.S., 1960	1000	2037	3225	5582	9520
Mexico, 1960	1000	2054	4422	10704	25193

The order of these series is not surprising: it is well known that fertility was unusually low in the United States in 1940 and is unusually high in Mexico. What may be surprising is the magnitude of the difference that can develop over a century: the final figure based on the Mexican 1960 matrix is nearly 15 times the final figure based on the American 1940 matrix.

22.14. The numbers in table 22.1 are totals: the survivors under the age of 45 from the original 1,000 girls plus their surviving female progeny under the same age. It would not be difficult to divide these totals between the nine five-year age groups, as is done in Keyfitz (119); and it would not be much more difficult to do this while at the same time keeping separate the generations: mothers, daughters, grand-daughters and so on. This calculation is not given in Keyfitz (119) but an approximate version is set out in table 22.2 below for time periods 0 by five-year intervals to 50. The approximation is fairly close: where it can be checked with Keyfitz's results a difference as great as two occurs only once.

22.15. Table 22.2 shows transient movements; eventually the progeny of the 1,000 girls will arrange themselves in a stable age distribution and thereafter will grow at a constant rate. This age distribution and this constant rate of growth are characteristic of the A-matrix and do not depend at all on whether we start off with 1,000 girls aged 0-4, 1,000 young women aged 25-29 or the actual distribution of the female population under 45 years of age. However, the closer our starting vector is to the stable age composition vector of the A-matrix, the shorter will be the transient period before the stable vector is reached.

Table 22.2. Progression to the end of the child-bearing ages of 1,000 girls under 5 in year 0 and their female progeny over a 50-year span, given the U.S. fertility and survival rates of 1960

(Numbers)

	Age groups	0	5	10	15	20	25	30	35	40	45	50
Mothers	0-4	1000										
	5-9		996									
	10-14			995								
	15-19				993							
	20-24					989						
	25-29						986					
	30-34							980				
	35-39								973			
	40-44									962		
	Total	1000	996	995	993	989	986	980	973	962	0	0
Daughters	0-4				106	410	536	363	197	94	19	
	5-9					106	408	534	362	196	84	19
	10-14						105	407	533	361	196	84
	15-19							105	407	532	360	196
	20-24								105	406	530	359
	25-29									104	404	528
	30-34										104	402
	35-39											104
	40-44											
	Total	0	0	0	106	516	1049	1409	1604	1683	1697	1692
Grand-daughters	0-4							11	87	282	517	627
	5-9								11	87	281	515
	10-14									11	87	280
	15-19										11	86
	20-24											11
	25-29											
	30-34											
	35-39											
	40-44											
	Total	0	0	0	0	0	0	11	98	380	896	1519
Great-grand-daughters	0-4										1	14
	5-9											1
	10-14											
	15-19											
	20-24											
	25-29											
	30-34											
	35-39											
	40-44											
	Total	0	0	0	0	0	0	0	0	0	1	15
Total	0-4	1000			106	410	536	374	284	366	537	641
	5-9		996			106	408	534	373	283	365	535
	10-14			995			105	407	533	372	283	364
	15-19				993			105	407	532	371	282
	20-24					989			105	406	530	370
	25-29						986			104	404	528
	30-34							980			104	402
	35-39								973			104
	40-44									962		
	Total	1000	996	995	1099	1505	2035	2400	2675	3025	2594	3226

22.16. A clearer understanding of the effects of changes in fertility and survival on the future growth and composition of a population can be gained from a decomposition of the A-matrix in terms of its characteristic roots and vectors, a subject to which we shall now turn.

D. The decomposition of the A-matrix

22.17. It is possible to calculate a diagonal matrix, $\hat{\mathbf{r}}$ say, and a matrix V say, both of the same order as A, such that

$$A = V \hat{\mathbf{r}} V^{-1} \qquad \text{(XXII.6)}$$

where the elements of $\mathbf{r}$ are the roots of the characteristic equation

$$|A - \rho I| = 0 \qquad \text{(XXII.7)}$$

and where the kth column of V, V_k say, is the characteristic vector corresponding to the kth element of $\mathbf{r}$, r_k say, and satisfies the equation

$$(A - r_k I) V_k = \{ 0, 0, ..., 0 \} \qquad \text{(XXII.8)}$$

From (XXII.6) it is clear that

$$A^\tau = V \hat{\mathbf{r}}^\tau V^{-1} \qquad \text{(XXII.9)}$$

Equation (XXII.6) represents the decomposition of the A-matrix into its characteristic roots, the elements of $\mathbf{r}$, and its characteristic vectors, the corresponding columns of V. How this can be done and the purpose of doing it are described in Keyfitz (121, chapter 3); here only an example is given of its use in demographic analysis.

22.18. In Keyfitz (120) an A-matrix relating to American females around 1940 is given, first in terms of nine five-year age groups spanning the ages 0-44 and then, for ease of expository calculation, in terms of three 15-year age groups. The aggregated matrix is

$$A = \begin{bmatrix} 0.32167 & 0.68154 & 0.12110 \\ 0.98610 & 0 & 0 \\ 0 & 0.97203 & 0 \end{bmatrix} \qquad \text{(XXII.10)}$$

It is then shown that the decomposition matrices, $V \hat{\mathbf{r}} V^{-1}$ are

$$V \hat{\mathbf{r}} V^{-1} = \begin{bmatrix} 1.12241 & 0.28278 & 0.04244 \\ 1.04471 & -0.52438 & -0.20315 \\ 0.95852 & 0.95852 & 0.95852 \end{bmatrix} \begin{bmatrix} 1.05944 & 0 & 0 \\ 0 & -0.53177 & 0 \\ 0 & 0 & -0.20601 \end{bmatrix} \begin{bmatrix} 0.49663 & 0.37156 & 0.05676 \\ 1.92919 & -1.66963 & -0.43939 \\ -2.42580 & 1.29806 & 1.42579 \end{bmatrix}$$

(XXII.11)

22.19. The diagonal matrix in (XXII.11) contains the three roots of the characteristic equation (XXII.7). Only one of these, as must be the case, is positive, the other two in this example being negative. The positive root is the dominant root and, as the matrix is raised to successively higher powers, will increase without limit. By contrast, the two minor roots, being negative and less than one, will change sign when raised to each successive power but at each round will become smaller and will tend to zero. In time, the female population under 45 will grow at the rate indicated by the dominant root; and the age composition of this population will tend to proportionality with the dominant characteristic vector, that is the first column of the first matrix of (XXII.11). Since the whole analysis relates to females under 45, this means that eventually this part of the population would grow steadily at the rate of about 5.9 per cent per 15-year period and that about 36 per cent would be in the age group 0-14, 33 per cent would be in the age group 15-29 and 31 per cent would be in the age group 30-44.

22.20. The position might be different if a change were to take place in the age-specific birth rates, and the kind of analysis outlined above can be used to examine the probable consequences. In Keyfitz (120) two possibilities are considered.

22.21. In the first place it is assumed that no births are attributable in the 15-year period to females in the first age group and that 70 and 30 per cent of the same total of births are attributable respectively to the second and third age groups. The roots now become: $r_1 = 1.052$, $r_2 = -0.526 - 0.351\iota$ and $r_3 = -0.526 + 0.351\iota$ where $\iota \equiv \sqrt{-1}$. The dominant root is only a little reduced but the modulus, 0.632, of the two complex roots is greater than the moduli, 0.532 and 0.206 respectively, of the two minor roots of (XXII.11). This means that in the stable state the growth rate will only be a little less than before but that the transient waves in population numbers, which arise if the initial age-composition vector is different from the stable vector, will take much longer to die away.

22.22. In the second place it is assumed that all the births are attributed to the middle age group. In this case the roots become: $r_1 = 1.03$, $r_2 = -1.03$ and $r_3 = 0$. This represents a radical change: not only is the dominant root now substantially smaller than it was but the second root is equal to it in magnitude though opposite in sign. This means that any wave in population numbers would not die away but would keep pace with the population.

22.23. It should be emphasized that the decomposition of the A-matrix is a useful tool of demographic analysis because it enables us to gain some insight into the probable effects of specific changes in fertility and mortality. It is not likely to be so useful in making predictions since in practice fertility and mortality may change all the time and neither remain constant nor be subject to a single once-and-for-all change as assumed in the above examples.

E. Fertility and the rate of increase of a population

22.24. As was said in section H.2 of chapter X above, the crude birth rate is a poor measure of fertility since it is affected by the age composition of the population and the age distribution of fertility as well as by the level of fertility. What was there called the general fertility rate would, if multiplied by the number of years in the reproductive span, provide a crude measure of the average number of children born by a woman who passed through the

whole span at current age-specific fertility rates. Properly made with the help of age-specific rates, rather than on the assumption that the average rate can be applied at all ages, this measure is termed the total fertility rate. The gross reproduction rate is similar but is restricted to female births. Only the net reproduction rate takes account of mortality and allows for the possibility that a girl may not live to the age which her mother was when she was born.

22.25. Another method of estimating the reproductive power of a population is to take the sum of the products of first marriages classified by age group and mean completed family sizes classified by age at marriage, and then to allow for the proportion of females in total births and the relative importance of illegitimate births. Even if time series of completed family sizes by age of bride are available, a considerable amount of extrapolation is needed to obtain an estimate of reproductive power which is representative of the present day as opposed to various periods in the past.

22.26. This brings us to the matrix decomposition method outlined in the preceding section. This method provides an estimate of the stable age composition vector associated with a given set of fertility and mortality rates and so, makes it possible to take account of the age composition of the population as it would be if the present forces of fertility and mortality were allowed to work themselves out.

F. Mortality and the expectation of life

22.27. The estimates presented by the United Nations (251) show that calculations of the expectation of life at birth made all over the world in the last decade vary from rather less than 30 to about 75 years and are almost always noticeably higher for females than for males. In Dublin and Lotka (58) this picture is given a longer historical perspective, at least for a number of countries in Europe and North America. From this work we see that the low expectations now found in many African and some Asian countries were quite common in Europe in the late eighteenth and early nineteenth centuries and even later. For instance the authors show for the male expectation of life at birth in years: 33 for Sweden in 1755-76, 38 for France in 1817-31, 36 for Germany in 1871-80 and 35 for Italy in 1876-87. Corresponding figures for these four countries in the 1960s given by the United Nations (251, 1970 edition) are: 72, 65, 68 and 67.

22.28. The collection of life-table calculations made in Preston, Keyfitz and Schoen (171) is remarkable not only for its coverage (180 populations with details on age and sex spanning 103 years and 48 nations) but also for the fact that in each case data are provided on recorded causes of death grouped into twelve categories based on the seventh revision of the International Classification of Diseases, Injuries and Causes of Death. This information enables the authors to calculate not only death rates by sex and by five-year age groups from each of the 12 causes but also the effect on the survivorship function of eliminating each particular cause or certain combinations of causes. It is assumed in making these calculations that there is no interaction between the specific cause eliminated and all other causes, and the circumstances in which this assumption is likely to lead to an overestimate or an underestimate of the effect are discussed. Granted the assumption, the years of life or of working life that would be saved by the elimination of one cause or certain combinations of them can be calculated.

G. Two links between demography and economics

22.29. As was mentioned in section A above, there is evidence of a relationship between the expectation of life at birth, $\mathring{e}_0$, and the GNP per head, μ say, expressed in U.S. dollars. This relationship is highly curvilinear and in Stone (206) an attempt is made to analyse it in terms of a log-logistic relationship, that is a relationship of the form

$$\mathring{e}_0 = \delta + \frac{(\gamma - \delta)}{1 + \exp(\alpha + \beta \log \mu)} + \epsilon \qquad \text{(XXII.12)}$$

where α, β, γ and δ denote parameters to be determined from the observations and ϵ denotes an error term. The parameters γ and δ denote respectively the upper and lower bounds of the relationship; the point of inflection occurs where $\mu = \alpha/\beta$; and β indicates the speed of adjustment of the process. It was expected that δ would be around zero, that the curve would rise sharply from this value at a level of μ equal to the subsistence level and, after passing the point of inflection, gradually slow down and approach an upper asymptote of about 74 years.

22.30. These expectations were not fulfilled as regards the behaviour of the curve at its lower end. On the basis of estimates of $\mathring{e}_0$, for both sexes combined for 104 countries in the mid-1960s, the following estimates were obtained:

$$\alpha = 8.3 \pm 1.8 \qquad \text{(XXII.13)}$$

$$\beta = 1.5 \pm 0.3 \qquad \text{(XXII.14)}$$

$$\gamma = 72.9 \pm 1.7 \qquad \text{(XXII.15)}$$

$$\delta = 32.9 \pm 3.8 \qquad \text{(XXII.16)}$$

with $R^2 = 0.87$. Thus the relationship accounts for 87 per cent of the variance of the observations and all the parameters are significant. But while the upper asymptote is about what might be expected, the lower asymptote is impossibly high, implying as it does that, as $\mu \to 0$, $\mathring{e}_0 \to 32.9$ years. This is probably a reflection of the fact that we do not know, and cannot know, about the lower end of this relationship since no society can survive at a level of income below some minimum of subsistence.

22.31. It can be seen from the parameter estimates just given that the point of inflection of the logistic occurs when $\mathring{e}_0 = 52.9$ years and $\mu = \$\,\text{U.S.}\,215$ a year per head. It can also be seen that little further improvement occurs after $\mu = \$\,\text{U.S.}\,1{,}000$ is reached; at that level $\mathring{e}_0 = 69.5$ years.

22.32. If (XXII.12) is fitted subject to the constraint that $\delta = 0$, the value of R^2 is only reduced by one percentage point but the values of α and β are more than halved and statistical tests throw doubt on the legitimacy of this constraint.

22.33. As has been said, the analysis is based on observations for 104 countries. This number could have been increased to 115 but only by including countries

in which $\mathring{e}_0$ was exceptionally low in comparison with μ. Some of these countries are multi-racial and some are countries in which the ownership of an important natural resource is highly concentrated. The inclusion of these countries makes relatively little difference to the parameter estimates but reduces R^2 considerably.

22.34. Despite the simplicity of this relationship and its limitations, all of which could be investigated further, there can be little doubt that there is a strong connexion between the expectation of life at birth and the GNP per head.

22.35. Although there are objections to the choice of forms of relationship that can lead to inconceivable values (for instance a negative value of $\mathring{e}_0$), the objections are less if this can only happen in inconceivable circumstances (for instance that the community's μ is less that the minimum needed to sustain life). On this argument it is of interest to see how well the data are approximated by a hyperbola, that is by a relationship of the form

$$\mathring{e}_0 = \gamma - \frac{\beta}{(\log\mu - \alpha)} + \varepsilon \qquad \text{(XXII.17)}$$

where α, β and γ denote parameters and ϵ denotes an error term. Here γ denotes the upper asymptote of $\mathring{e}_0$ and α denotes the value of $\log\mu$ at which $\mathring{e}_0 \to -\infty$. With the same 104 countries we find that

$$\alpha = 2.48 \pm 2.44 \qquad \text{(XXII.18)}$$

$$\beta = 692.0 \pm 421.2 \qquad \text{(XXII.19)}$$

$$\gamma = 141.6 \pm 25.9 \qquad \text{(XXII.20)}$$

with $R^2 = 0.85$. Thus nothing is gained compared with the logistic: R^2 is slightly smaller and the parameters are badly determined.

22.36. The second link with economics concerns the dependency ratio, that is the ratio of the number who are potentially inactive economically to the number potentially active. It is usual to measure the potentially inactive as the population aged 0-14 and 65+ and to measure the potentially active as the population aged 15-64. This ratio varies around the world from over one to under one half; and it is clear that the economic difficulties of countries with a high dependency ratio are likely to be much greater than those of countries where the ratio is lower.

22.37. Countries with a fast rate of population growth have a relatively large number of young people and countries with a slow rate of population growth have a relatively large number of old people. This tendency is reinforced since fast growing countries are usually poor and so have a low expectation of life whereas slow growing countries are usually rich and so the expectation is high. Since dependants occur at both ends of the life span, we may ask how the dependency ratio, π say, is associated with the rate of population growth, ρ say, and GNP per head, μ.

22.38. This question can be answered be relating π to ρ and μ. Suppose that

$$\pi = \alpha + \beta\rho + \gamma\mu + \varepsilon \qquad \text{(XXII.21)}$$

where α, β and γ denote parameters and ϵ denotes an error term. On the basis of 95 countries for which data on π, ρ and μ are available for the mid-1960s, it is shown in Stone (206) that

$$\alpha = 0.518 \pm 0.032 \qquad \text{(XXII.22)}$$

$$\beta = 0.139 \pm 0.011 \qquad \text{(XXII.23)}$$

$$\gamma = -0.000037 \pm 0.000014 \qquad \text{(XXII.24)}$$

with $\bar{R}^2 = 0.763$. The answer, therefore, seems clear: it is the fast-growing, poor countries that have on the whole the higher dependency ratios.

H. Migration: data and models

22.39. It is a simple matter to expand the standard demographic matrix set out in table 7.1 above to cover a number of regions; the difficulty is to find a means of estimating its elements, since information on gross as opposed to net flows is rarely available. Consecutive population censuses are a potential source of data but the problem is to link them.

22.40. A means of doing this is given in Rees and Wilson (174), one of the papers in Wilson (285) to which reference was made in section A above. Their numerical illustration is based on the population censuses of England and Wales for 1961 and 1966 and relates to three regions: the West Riding of Yorkshire, the rest of England and Wales and the rest of this world. The example is set out, in the form a generalization of table 7.1, in table 22.3 below.

22.41. The main difference between the two tables is that in table 22.3 what was called in table 7.1 the outside world is divided into two parts: the rest of this world, that is all countries other than England and Wales; and the other world, from which births come and to which deaths go. Otherwise the arrangement is the same as before. The numbers in the left-hand top quadrant relate to children born after the census of 1961 who died before the census of 1966 and so were recorded in neither census. The numbers in the right-hand top quadrant relate to the deaths, in the interval between the censuses, of people who were alive at the first date and so were recorded in the earlier census but not in the later one. The numbers in the left-hand bottom quadrant relate to the births, in the interval between the censuses, of people who were still alive at the second date and so were recorded in the later census but not in the earlier one. Finally, the numbers in the right-hand bottom quadrant relate to people who were alive at both dates and so were recorded in both censuses.

22.42. To illustrate what is contained in table 22.3 let us concentrate on the row and column for the West Riding of Yorkshire. At the foot of the column, the stock in 1961 is shown as 3,650,586. Of these, 3,219,571 survived in the West Riding to 1966 and 193,397 died in the West Riding. The remainder emigrated: 168,207 + 10,468 = 178,675 to other parts of England and Wales; and 55,328 + 3,615 = 58,943 to countries outside England and Wales. In each case, the total of migrants is divided between those who survived to 1966 and those who died in the interval 1961-66. At the end of the row the stock in 1966 is shown as 3,726,683. Of these, the same 3,219,571 survived in the West Riding from 1961, and out of the total births in the region of 333,321 between 1961 and 1966 only 301,289 survived in the region to 1966. Of the immigrants into the West Riding during the interval: 137,183 + 7,327 = 144,510 came from the rest of England and Wales and 58,804 + 2,509 = 61,313 came from other countries.

Table 22.3. A demographic matrix for several regions: a generalization of table 7.1

(Numbers)

1966 \ 1961		Other world (births, 1961-66)			West Riding of Yorkshire	Rest of England and Wales	Rest of this world	Totals
		WRY	REW	RTW				
Other world (deaths, 1961-66)	WRY	19,684	479	164	193,397	8,963	3,842	226,529
	REW	460	225,960	2,761	10,468	2,235,144	63,008	2,537,801
	RTW	276	3,549	-	3,615	51,790	-	-
West Riding of Yorkshire		301,289	7,327	2,509	3,219,571	137,183	58,804	3,726,683
Rest of England and Wales		7,391	3,630,890	44,358	168,207	39,189,542	1,012,460	44,052,848
Rest of this world		4,221	57,031	-	55,328	831,390	-	-
Totals		333,321	3,925,236	-	3,650,586	42,453,962	-	-

22.43. Information of the kind presented in table 22.3 would clearly be of great value for regional analysis; and the authors indicate that they are developing methods of producing similar data divided by age and sex. If these were available the way would be open for realizing the type of migration model outlined in Keyfitz (121, chapter 14).

22.44. For simplicity, let us ignore the distinction of sex and work with a single fertility and survival matrix, A. Let us denote by A_r, A_s and A_t respectively the A-matrices for three regions, r, s, and t, which by assumption form a closed system. We can generalize the model, $\Delta\mathbf{n} = A\mathbf{n}$, by writing, for instance,

$$\begin{bmatrix} \Delta\mathbf{n}_r \\ \Delta\mathbf{n}_s \\ \Delta\mathbf{n}_t \end{bmatrix} = \begin{bmatrix} \hat{\mathbf{m}}_{rr} & \hat{\mathbf{m}}_{rs} & \hat{\mathbf{m}}_{rt} \\ \hat{\mathbf{m}}_{sr} & \hat{\mathbf{m}}_{ss} & \hat{\mathbf{m}}_{st} \\ \hat{\mathbf{m}}_{tr} & \hat{\mathbf{m}}_{ts} & \hat{\mathbf{m}}_{tt} \end{bmatrix} \begin{bmatrix} A_r & 0 & 0 \\ 0 & A_s & 0 \\ 0 & 0 & A_t \end{bmatrix} \begin{bmatrix} \mathbf{n}_r \\ \mathbf{n}_s \\ \mathbf{n}_t \end{bmatrix}$$

$$= \begin{bmatrix} \hat{\mathbf{m}}_{rr}A_r & \hat{\mathbf{m}}_{rs}A_s & \mathbf{m}_{rt}A_t \\ \hat{\mathbf{m}}_{sr}A_r & \hat{\mathbf{m}}_{ss}A_s & \mathbf{m}_{st}A_t \\ \hat{\mathbf{m}}_{tr}A_r & \hat{\mathbf{m}}_{ts}A_s & \mathbf{m}_{tt}A_t \end{bmatrix} \begin{bmatrix} \mathbf{n}_r \\ \mathbf{n}_t \\ \mathbf{n}_s \end{bmatrix} \quad \text{(XXII.25)}$$

where: $\mathbf{m}_{rs}$ denotes a vector whose elements are the proportions of the different age groups moving in the interval from region s to region r; $\mathbf{m}_{rr} = \mathbf{i} - \mathbf{m}_{sr} - \mathbf{m}_{tr}$; and so on.

22.45. From (XXII.25), $\Delta\mathbf{n}_r$, is given by

$$\Delta\mathbf{n}_r = (I - \hat{\mathbf{m}}_{sr} - \hat{\mathbf{m}}_{tr})A_r\mathbf{n}_r + \hat{\mathbf{m}}_{rs}A_s\mathbf{n}_s + \hat{\mathbf{m}}_{rt}A_t\mathbf{n}_t$$
$$= A_r\mathbf{n}_r - (\hat{\mathbf{m}}_{sr} + \hat{\mathbf{m}}_{tr})A_r\mathbf{n}_r + \hat{\mathbf{m}}_{rs}A_s\mathbf{n}_s + \hat{\mathbf{m}}_{rt}A_t\mathbf{n}_t \quad \text{(XXII.26)}$$

The first term on the right-hand side of (XXII.26) shows the value of $\Delta\mathbf{n}_r$, in the absence of migration; the second term shows the emigration from region r; and the third and fourth terms shows the immigration into region r. As is pointed out in Keyfitz (121, chapter 14), in this variant of the model the age composition vector of each region changes during the interval in accordance with the fertility and survival pattern of that region and then, at the end of the period, certain proportions in each age group in each region move to another region.

22.46. Let us write $\Delta\mathbf{n} = MA\mathbf{n}$ where M and A denote the two partitioned matrices in the first row of (XXII.25). If we wish to represent the situation in which migrants move at the beginning of the interval but retain through it their original fertility and survival patterns we should have to replace MA by a matrix which might be denoted by $(AM')^*$. This notation is intended to indicate that the submatrices are transposed as units while retaining their original rows and columns.

22.47. If we wish to represent the situation in which the migrants immediately adopt the fertility and mortality patterns of the country to which they move, then the M-matrix can no longer be used since if it is the emigrants from r to s will differ from the immigrants to s from r unless $A_r = A_s$. In these circumstances it is necessary to replace M by a matrix, N say, in which the elements are proportions of the relevant age group in the receiving country rather than in the country left behind. The off-diagonal submatrices of N are of the form $-\hat{\mathbf{n}}_{rs}$ and the diagonal submatrices are of the form $(I + \hat{\mathbf{n}}_{rs} + \hat{\mathbf{n}}_{rt})$. As before, there are two possibilities which might be denoted by AN' and $(NA)^*$.

22.48. These models could be simplified by getting rid of age and assuming that each region had an intrinsic rate of growth given by the dominant characteristic root of its A-matrix. This matrix could be replaced by its dominant characteristic root, ρ_r say, and the vectors $\mathbf{n}_r$ and $\mathbf{m}_{rs}$ could be replaced by scalars, ν_r and μ_{rs} say, corresponding respectively to the size of the population in region r and the proportion of the pop-

ulation of region s which emigrates in a single interval to region r. With these simplifications (XXII.25) reduces to

$$\Delta \mathbf{n} = M\hat{\mathbf{r}}\mathbf{n} \qquad \text{(XXII.27)}$$

where:

$\Delta \mathbf{n} \equiv \{\Delta v_r\ \Delta v_s\ \Delta v_t\}$; $\mathbf{n} = \{v_r\ v_s\ v_t\}$; $\mathbf{r} \equiv \{\rho_r\ \rho_s\ \rho_t\}$; $\mathbf{m}_{rs} \equiv \mu_{rs}$ for $\mathbf{s} \neq \mathbf{r}$ and to $1 - \mu_{rs} - \mu_{tr}$ for $\mathbf{s} = \mathbf{r}$; and $M\mathbf{i} = \mathbf{i}$.

A still greater simplification would result if each region had the same dominant root, ρ say. If the regional populations were all intrinsically stationary then $\mathbf{r} = \mathbf{i}$ and (XXII.27) reduces to

$$\Delta \mathbf{n} = M\mathbf{n} \qquad \text{(XXII.28)}$$

22.49. A further step in this type of analysis could be taken if we were able to account for changes in interregional migrations. This problem has been analysed in Oliver (152, 153) using data for Britain divided into nine standard regions over the years of the decade 1951-61. If we denote the net annual immigration rate into region r by λ_r and the excess of the unemployment percentage in region r over the national unemployment percentage by v_r, then by pooling the results for the ten years, Oliver obtains the following results for males, females and both sexes combined

$$\lambda = -0.079\ -0.327\ (\pm 0.045)\, v \qquad \text{(XXII.29)}$$

$$\lambda = -0.113\ -0.224\ (\pm 0.045)\, v \qquad \text{(XXII.30)}$$

$$\lambda = -0.087\ -0.292\ (\pm 0.040)\, v \qquad \text{(XXII.31)}$$

with $\bar{R}^2 = 0.61$, 0.46 and 0.61 respectively.

22.50. It would seem from this analysis that there was a marked tendency for regions with relatively high unemployment percentages to lose numbers through migration. By disaggregating these results by region, there appear to be regional differences in the extent to which net migration responds to relative unemployment; and by disaggregating by years there is some suggestion that migration may be more effective in reducing disparities of unemployment in bad times than in good and, also, that over the period its influence in this respect tended to decline.

XXIII. EXAMPLES RELATING TO FAMILY FORMATION, FAMILIES AND HOUSEHOLDS

A. Introduction

23.1. In the preceding chapter, fertility was represented by the age-specific fertility rates of females. No explicit reference was made to marriage and its duration, to the number of children already born to a married couple, or to divorce and widowhood. Changes in these factors may enable us to account for at least a part of age-specific fertility. In studying them, the concept of a marital status transition matrix may be useful, and this is described and illustrated in the following section. This paves the way for a more symmetrical treatment of the two sexes and an explicit recognition of the institutional framework within which human reproduction normally takes place.

23.2. Information relating to the stocks of families and households, classified in a variety of ways, are familiar from censuses and surveys. On the other hand the movements of individuals through family and household types and the continuous dissolution and constitution (or reconstitution) of families and households do not seem to have been much studied. Numerical illustrations of this part of the system are either too well-known to be reproduced here or apparently non-existent.

B. The marital status transition matrix

23.3. As its name implies, a marital status transition matrix shows the number of males (or females) in different categories at two consecutive dates and their movements between these categories over the connecting interval. A simple example for females which bears some relationship to the state of affairs in England and Wales in 1964-64 is set out in table 23.1 below.

Table 23.1. A marital status transition matrix for females

State at time θ / State at time θ+1			Outside world	Our country				Totals
				Never married		Married	Widowed and divorced	
				<15	15+			
Outside world			7	2	26	93	142	
Our country	Never married	<15	424	4821	0	0	0	5245
		15+	-19	365	3876	0	0	4222
	Married		37	0	318	11692	37	12084
	Widowed and divorced		-15	0	0	225	2598	2808
Totals				5188	4220	12010	2777	

23.4. Table 23.1 is in the standard form of table 7.1, net immigration being shown as a net inflow from the outside world. As can be seen by comparing the the row and column of totals, this population is not in a state of stationary equilibrium. If, nevertheless, for expository purposes we form a C-matrix and then the matrix inverse $(I-C)^{-1}$, we obtain

$$(I-C)^{-1} = \begin{bmatrix} 14.1 & 0 & 0 & 0 \\ 12.1 & 12.1 & 0 & 0 \\ 40.2 & 40.4 & 44.2 & 9.1 \\ 11.7 & 11.7 & 12.8 & 18.1 \end{bmatrix} \quad \text{(XXIII.1)}$$

23.5. Though rough, these numbers are sufficient as an illustration. They represent time measured in years and show the expected time to be spent in the state corresponding to the row by someone entering the state corresponding to the column. From the first column of (XXIII.1) we can see that at birth a girl will spend 14 years before reaching the age of 15; a further 12 years on average before getting married; and a further 52 years on average before her death. These numbers can be added up to give an estimate of the expectation of life at birth of 78 years. Regarded as a reflection of the position in England and Wales in 1963-64, these numbers are all a little too high: the first number must be less than 14 since there are some deaths in childhood; the average age of females at first marriage was at that time 23 years rather than the 26 years which, ignoring youthful deaths, is implied in (XXIII.1); and the female expectation of life at birth was 74.4 years.

23.6. A similar interpretation can be given to the numbers in the remaining columns; and, by comparing the numbers across the rows rather than down the

columns further expectations can be calculated. For instance we might accept $40.2/44.2 = 0.91$ as an estimate of the female expectation at birth of getting married.

23.7. The shortcomings of table 23.1 can be traced to a number of sources: first, there are statistical difficulties in allocating deaths and migrants to the different states; second, there is the fact that the table has not been adjusted for lack of stationarity; and, third, the grouping into states is very coarse with the consequence that the states shown in the table are unduly heterogeneous.

23.8. In trying to improve the homogeneity of table 23.1, the following additional criteria of classification suggest themselves.

23.9. First, it would be helpful to make age, reckoned in 5-year or 10-year age groups, the primary criterion; with the classification by marital status repeated in each relevant age group. This would have two advantages: the assumption of constant probabilities would be more plausible if they were age-specific: and the resulting C-matrix would be lower triangular and so, as demonstrated in section C.4 of chapter VII, the fundamental matrix $(I-C)^{-1}$ could be calculated with relative ease.

23.10. Second, the two categories, widowed and divorced, should be separated.

23.11. Third, the category, married, could be further classified by duration of marriage.

23.12. Finally, a similar stock-flow matrix could be established for males. In using these matrices to make projections it would have to be recognized that at all times they have certain features in common: the total numbers married in each duration of marriage group.

23.13. The information just described would make it possible to study the changes in the size of different marital status groups implicit in the probabilities of movement that hold in a given period. If some of these probabilities are changing then we are back at the problem of changing coefficients discussed in section C.1 of chapter VII above.

C. Extensions of the simple model of fertility and survival

23.14. In the fertility and survival matrix described in section B of the preceding chapter all births were related to the female age-composition vector by means of age-specific fertility rates; and the male age-composition vector was only used in estimating the future number of males, survival being determined in the case of both sexes by means of age-specific survival rates. A more symmetrical treatment of the sexes and an explicit recognition of the institution of marriage would clearly be desirable.

23.15. These problems are discussed in Keyfitz (121) starting from the earlier work of Kendall (118) and Goodman (86, 87). If the sexes are not to be treated separately then the most obvious treatment is to assume female dominance and, in an aggregate model, to relate all births to the number of females. However, it would be equally possible to relate them to the number of males and it would seem more realistic to relate them to some average of the two sexes. If circumstances were such that an imbalance in the sex ratio had to be considered then it would be desirable to allow the weight assigned to each sex to depend on its relative scarcity. When allowance is made for the age composition of the population, these extensions can be used to generalize the female-dominated model outlined in the preceding chapter.

23.16. A further generalization of the simple model considered by the authors just mentioned consists in the explicit recognition of marriage so that births depend not only on the numbers of males and females in the different age groups but also on the extent to which they are married. Under this arrangement a community is composed not just of males and females of different ages but of single males, single females and married couples.

23.17. The information discussed in the preceding section covers marital status in addition to age and sex. In order to extend the simple model of fertility and survival we should need to add state-specific fertility rates. It would also be useful if we could introduce yet another criterion of classification: the number of births for which a man or women were responsible either in his or her present marriage or in total.

23.18. A great deal of work has been done in recent years on the application of Markov models to the analysis of fertility and nuptiality. For instance, in Hoem (98) a probabilistic model of primary marital fertility is set out and other studies in the same general area appear in Hoem (99, 101, 102). More general investigations relevant to the subjects discussed in this report are provided in Hoem (100, 103, 104).

23.19. The data and models that have been described enable fertility to be accounted for in terms of such factors as age, marital status, duration of marriage and parity. Lying behind these factors are many social influences. These are discussed in Hawthorn (94) which contains a long, annotated bibliography dealing, in particular, with the period 1962-68.

23.20. In Nerlove and Schultz (144) an attempt is made to account for variations in fertility within a still wider framework. Following the single equation model of birth rate determination in Schultz (183), the authors construct a simultaneous equations model that accounts for various aspects of demographic and economic behaviour which are linked to the process of family formation. In particular, fertility is regarded as being jointly determined along with women's participation in the labour force, interregional migration, personal income and the prevalence and character of marital unions. Death rates, the industrial structure of employment, levels of education and unemployment rates are treated as exogeneous; but the changing age and sex composition of an area is determined by the model given the initial state. The study relates to Puerto Rico and makes use of data contained in the population censuses of 1950 and 1960.

23.21. Although no example is given in this chapter of the transitions of families or households, an analysis of household transitions is set out in section B of chapter XXVI below. That example relates to the movement of households through various occupancy groups and seems, therefore, most relevant in connexion with housing and its environment.

XXIV. EXAMPLES RELATING TO SOCIAL CLASS, STRATIFICATION AND MOBILITY

A. Introduction

24.1. Two examples will be given in this chapter. The first relates to the factors influencing socio-economic status and employs the technique of regression analysis. The second relates to social mobility and makes use of a Markov model.

B. The influences on socio-economic status

24.2. This example is based on the work of Duncan, Featherman and Duncan (60) which follows on Blau and Duncan (29). In it the authors set out to account for differences in socio-economic status among a group of individuals as measured by occupational scores on the scale proposed in Duncan (59). The basic model consists of six variables, three of which are exogenous, meaning that they influence but are not influenced by the other three, and three of them are endogenous, meaning that in addition to being influenced by the exogenous variables they may also be influenced by one another.

24.3. The exogenous variables are father's education, father's occupation and number of brothers and sisters; and the endogenous variables are son's education, son's occupation and son's income. Let $X \equiv [x_1\ x_2\ x_3]$ where the elements of the vector x_1, for instance, are the father's educational rating for the various members of the sample; and let $Y \equiv [y_1\ y_2\ y_3]$ where the elements of y_1, for instance, are the member's own educational rating. The assumptions are made that, apart from error terms: y_1 depends only on x_1, x_2 and x_3; y_2 only on y_1, x_1, x_2 and x_3; and y_3 on y_1, y_2, x_1, x_2, x_3. Thus there is no feed-back among the endogenous variables and the system is triangular or, in the sense of Bentzel and Wold (26), recursive. In the class of simultaneous equation models, such models have very special properties.

24.4. Let us denote the matrix of error terms by $U \equiv [u_1\ u_2\ u_3]$, the matrix of parameters connecting the endogenous variables by A and the matrix of parameters connecting the endogenous variables with the exogenous variables by B. In the present example

$$A = \begin{bmatrix} 0 & 0 & 0 \\ a_{21} & 0 & 0 \\ a_{31} & a_{32} & 0 \end{bmatrix} \qquad \text{(XXIV.1)}$$

and

$$B = \begin{bmatrix} b_{11} & b_{12} & b_{13} \\ b_{21} & b_{22} & b_{23} \\ b_{31} & b_{32} & b_{33} \end{bmatrix} \qquad \text{(XXIV.2)}$$

In these terms the basic model can be written as

$$\begin{aligned} Y &= YA' + XB' + U \\ &= XB'(I-A')^{-1} + U(I-A')^{-1} \\ &= XC' + U(I-A')^{-1} \end{aligned} \qquad \text{(XXIV.3)}$$

where $C' \equiv B'(I-A')^{-1}$.

24.5. Whereas the elements of B measure the direct effects of the exogenous on the endogenous variables, the elements of C measure the corresponding direct and indirect effects and so the elements of $C-B$ measure the indirect effects. In this example

$$C-B = \begin{bmatrix} 0 & 0 & 0 \\ a_{21}b_{11} & a_{21}b_{12} & a_{21}b_{13} \\ (a_{31}+a_{32}a_{21})b_{11} + a_{32}b_{21} & (a_{31}+a_{32}a_{21})b_{12} + a_{32}b_{22} & (a_{31}+a_{32}a_{21})b_{13} + a_{32}b_{23} \end{bmatrix} \qquad \text{(XXIV.4)}$$

and so we see, for instance, that in addition to a direct effect, b_{21}, of father's education on son's occupation there is also an indirect effect, $a_{21}b_{11}$, exercised through son's education.

24.6. Since there are 12 non-zero elements in A and B and only nine in C it is impossible to estimate the elements of A and B from those of C. However, just because A is triangular, it is permissible, as shown for instance in Walters (276, pp. 196-7), to treat the full equations as regression equations and it is not essential, for estimation purposes, to work through the reduced form equations in (XXIV.3).

24.7. Estimates of the parameters in the basic model are given in Duncan, Featherman and Duncan (60, tables 3.2 and 3.3). They relate to non-negro American men with non-farm backgrounds who were in the civilian labour force at March 1962. They are set out, in the order adopted in the above equations in tables 24.1, 24.2 and 24.3 below.

24.8. Table 24.1 relates to the total effect of the exogenous variables on the endogenous variables, that is to say it shows the elements of the C-matrix. We can see from table 24.1 that the direct and indirect effects of the exogenous variables are greatest on education and smallest on income and that occupation, with one exception, occupies an intermediate position. The effects of father's education and occupation are positive while the effect of the number of brothers and sisters is negative.

24.9. Table 24.2 relates to the direct effects of all the variables on the endogenous variables, that is to say it shows the elements of the A- and B-matrices. By comparing tables 24.1 and 24.2 we can see that some of the indirect effects of the exogenous variables are substantial. These indirect effects, which are equal to $C-B$, are set out in table 24.3 below.

Table 24.1. *C*-matrices for four age groups

Dependent variable \ Determining variable	Father's education	Father's occupation	Number of son's brothers and sisters
Age 25-34			
Son's education	0.2194	0.2585	-0.2080
Son's occupation	0.1928	0.2263	-0.1438
Son's income	0.0506	0.1534	-0.1036
Age 35-44			
Son's education	0.1985	0.2780	-0.2053
Son's occupation	0.1198	0.2842	-0.1703
Son's income	0.1120	0.1746	-0.0998
Age 45-54			
Son's education	0.1680	0.3210	-0.1856
Son's occupation	0.0646	0.3126	-0.1467
Son's income	0.0459	0.2669	-0.0605
Age 55-64			
Son's education	0.1695	0.2562	-0.1736
Son's occupation	0.1255	0.2486	-0.1624
Son's income	0.0714	0.1347	-0.0603

Table 24.2. *A*- and *B*-matrices for four age groups

Dependent variable \ Determining variable	Son's education	Son's occupation	Son's income	Father's education	Father's occupation	Number of son's brothers and sisters
Age 25-34						
Son's education	-	-	-	0.2194	0.2585	-0.2080
Son's occupation	0.5875	-	-	0.0638	0.0744	-0.0216
Son's income	0.0556	0.2635	-	(-0.0124)	0.0794	-0.0542
Age 35-44						
Son's education	-	-	-	0.1985	0.2780	-0.2053
Son's occupation	0.5668	-	-	(0.0073)	0.1266	-0.0540
Son's income	0.1193	0.3247	-	0.0494	0.0492	-0.0201
Age 45-54						
Son's education	-	-	-	0.1680	0.3210	-0.1856
Son's occupation	0.5245	-	-	-0.0235	0.1442	-0.0494
Son's income	0.1153	0.3204	-	(0.0059)	0.1298	(0.0079)
Age 55-64						
Son's education	-	-	-	0.1695	0.2562	-0.1736
Son's occupation	0.4687	-	-	0.0460	0.1285	-0.0810
Son's income	0.1293	0.2970	-	(0.0122)	(0.0277)	(0.0104)

Note: Parameter estimates which are less than their standard errors are enclosed in ( ).

We can see from table 24.3 that the indirect influences are well marked, particularly in the case of their effect on son's occupation.

24.10. The basic model is not an end but a beginning and the greater part of the study is taken up with extending it in various directions and by various means. Among the influences considered are national origin and race, intelligence (both in youth and maturity), aspirations and motives, mothers, schoolfellows, schools and wives, age at first job and a variety of marital factors. These are studied singly or in groups without a monolithic extension of the basic model since, with so many criteria of classification, a very large number of observations would have been required.

C. Social mobility

24.11. The methods described in the preceding section are directed to identifying and measuring influences on socio-economic status. These are numerous and may act either directly or indirectly. At the outset we cannot be certain that the influences we have identified are the most important ones: we may have left out factors with a strong effect and included ones with a weak effect. A trial and error search procedure is needed, therefore, to arrive at an acceptable model.

24.12. By contrast, the methods described in this section start from the observation that, whatever the status group of the fathers, the sons will be found to

Table 24.3. $(C-B)$-matrices for four age groups

Dependent variable \ Determining variable	Father's education	Father's occupation	Number of son's brothers and sisters
Age 25-34			
Son's education	0	0	0
Son's occupation	0.1290	0.1519	-0.1222
Son's income	0.0630	0.0740	-0.0494
Age 35-44			
Son's education	0	0	0
Son's occupation	0.1125	0.1576	-0.1163
Son's income	0.0626	0.1254	-0.0797
Age 45-54			
Son's education	0	0	0
Son's occupation	0.0881	0.1684	-0.0973
Son's income	0.0400	0.1371	-0.0684
Age 55-64			
Son's education	0	0	0
Son's occupation	0.0795	0.1201	-0.0814
Son's income	0.0592	0.1070	-0.0707

be distributed over a range of status groups. Accepting this as a fact and wihout going into the question of why it should be so, we may ask how the status composition vector would change if the process were allowed to run indefinitely in the case of a homogeneous population of fixed size in which the transition proportions were not only constant but could be interpreted as probabilities. By doing this we can, if the assumptions are justified, make a number of calculations. Many of the problems that arise in applying this method to the study of intergenerational and intragenerational mobility were discussed in sections F and G of chapter XII above. Here, the method will be illustrated by the data on intergenerational changes of status provided by Glass and Hall in Glass (81, chapter VIII). Although this study is now 20 years old, it has been chosen because it has been extensively analysed, initially in Prais (168, 169) and later in Kemeny and Snell (117).

24.13. The social transition matrix set out in Glass (81, p. 183) relates to 3,497 men (the sons) whose status was recorded in 1949. There are seven status categories, based on occupations, which run from "professional and high administrative" to "unskilled manual". They are of very unequal sizes, over 40 per cent of both fathers and sons being in class 5 and described as "skilled and routine non-manual". If we denote this matrix by D, then

$$D = \begin{bmatrix} 0.388 & 0.107 & 0.035 & 0.021 & 0.009 & 0.000 & 0.000 \\ 0.146 & 0.267 & 0.101 & 0.039 & 0.024 & 0.013 & 0.008 \\ 0.202 & 0.227 & 0.188 & 0.112 & 0.075 & 0.041 & 0.036 \\ 0.062 & 0.120 & 0.191 & 0.212 & 0.123 & 0.088 & 0.083 \\ 0.140 & 0.206 & 0.357 & 0.430 & 0.473 & 0.391 & 0.364 \\ 0.047 & 0.053 & 0.067 & 0.124 & 0.171 & 0.312 & 0.235 \\ 0.015 & 0.020 & 0.061 & 0.062 & 0.125 & 0.155 & 0.274 \end{bmatrix} \quad \text{(XXIV.5)}$$

24.14. The elements in each of the columns of (XXIV.5) add up to one since the sons of any group of fathers must all be in one or other of the seven categories. It is for this reason that the symbol D, rather than the usual C, has been used. In this case the column sums of $(I-D)$ are all zero and so no inverse exists. The matrix D can be regarded as restricted to survivors, since all the families continue from one generation to the next. Only in the case, discussed in paragraph 29.20 below, in which the survivorship matrix is age-dependent can an inverse $(I-D)^{-1}$ be formed.

24.15. The model in the present case is simply

$$\Lambda \mathbf{n} = D\mathbf{n} \qquad \text{(XXIV.6)}$$

where $\mathbf{n}$ denotes the status composition vector of the fathers. As D is raised to higher and higher powers, $\Lambda^s\mathbf{n}$ approaches a stable vector, $\mathbf{n}^*$ say. In this example, the actual status composition vectors for fathers and sons are

$$\mathbf{n} = \{0.037\ 0.043\ 0.098\ 0.148\ 0.432\ 0.131\ 0.111\} \qquad \text{(XXIV.7)}$$

and

$$\Lambda\mathbf{n} = \{0.029\ 0.046\ 0.088\ 0.127\ 0.409\ 0.182\ 0.129\} \qquad \text{(XXIV.8)}$$

respectively; and the stable vector is

$$\mathbf{n}^* = \Lambda^s\mathbf{n} = \{0.023\ 0.042\ 0.088\ 0.127\ 0.409\ 0.182\ 0.129\} \qquad \text{(XXIV.9)}$$

These results show that the process represented by (XXIV.5) was not very far removed from its stable vector in the period of observation but that eventually there would be rather fewer families in the higher status

groups and rather more families in the lower status groups that at present.

24.16. The number of generations, g_j say, spent, on average, in status group j by a family entering that group is

$$g_j = [1/(1-d_{jj})] \pm \sqrt{d_{jj}}\,[1/(1-d_{jj})] \quad \text{(XXIV.10)}$$

where d_{jj} denotes the diagonal element at the intersection of row and column j of D. In the present example

$$\mathbf{g} = \{1.63 \quad 1.36 \quad 1.23 \quad 1.27 \quad 1.90 \quad 1.45 \quad 1.38\} \quad \text{(XXIV.11)}$$

with standard errors, the elements of $\mathbf{s}$ say, given by

$$\mathbf{s} = \{1.02 \quad 0.71 \quad 0.54 \quad 0.58 \quad 1.30 \quad 0.81 \quad 0.72\} \quad \text{(XXIV.12)}$$

24.17. We can form some idea of the degree of mobility of a society by comparing $\mathbf{g}$ with a measure, $\mathbf{g}^*$ say, whose elements represent the number of generations that would be spent in a status group if the society were perfectly mobile. Perfect mobility can be defined as a state of affairs in which the distribution of sons over status groups is independent of the status group of their fathers. If D^* denotes the transition matrix of a perfectly mobile society, then all the columns of D^* are the same. The most obvious choice for this common vector is the stable vector of D. On this basis, $\mathbf{g}^*$ in the present example is given by

$$\mathbf{g}^* = \{1.02 \quad 1.04 \quad 1.10 \quad 1.15 \quad 1.69 \quad 1.22 \quad 1.15\} \quad \text{(XXIV.13)}$$

If we take the ratios $\hat{\mathbf{g}}^{*-1}\mathbf{g}$, we obtain

$$\hat{\mathbf{g}}^{*-1}\mathbf{g} = \{1.59 \quad 1.30 \quad 1.12 \quad 1.11 \quad 1.12 \quad 1.19 \quad 1.20\} \quad \text{(XXIV.14)}$$

Although the elements of (XXIV.14) are greater than one, the differences are small and it would appear that the process represented by (XXIV.5) reflects a fairly high degree of mobility.

24.18. The assumptions on which these conclusions rest are fairly restrictive. Let us look at the more important ones.

24.19. In the first place, it is assumed that the population is homogeneous and not made up of separate groups with different transition matrices. This difficulty has long been recognized, as in the mover-stayer model of Blumen, Kogan and McCarthy (32). This, however, is a very special case in which one group is assumed to move according to the transition matrix and the other group is assumed not to move at all. Such an assumption seems useful in studying intragenerational mobility but is perhaps less acceptable in the present case.

24.20. In some situations, the population can be divided into separate groups because the aim is to study the differences between the groups. For instance in Coleman (46) a model of fertility, education and occupation is constructed separately for blacks and whites in the male population of the United States. The model relates to births and survivals and enables individuals to be traced through a series of educational and occupational states year-by-year between the ages of 14 and 39. Thus the average course of members of the two groups can be calculated and compared. But it is possible to go further and, by changing some of the elements of the transition matrix, to endow one group with some of the characteristics of the other.

24.21. In discussing intragenerational mobility, McFarland (133) proposes a modification of the simple model which, it would seem, can be adapted to the present case. Each individual, j say, is endowed with a separate D_j; $\mathbf{n}$, as above, is the initial status composition vector of the population; and $\mathbf{n}_j$ is a vector in which the only non-zero element is a 1 in the position corresponding to j's initial status. Then we can write

$$\Lambda\mathbf{n} = \sum_j D_j\,\mathbf{n}_j \quad \text{(XXIV.15)}$$

and

$$\Lambda^*\mathbf{n} = \sum_j D^*_j\,\mathbf{n}_j \quad \text{(XXIV.16)}$$

It would seem only necessary to interpret the suffix j as referring to a group, in which case $\mathbf{n}_j$ denotes the initial status composition vector of group j, and future composition vectors for the population are obtained as the sum of the composition vectors for the groups.

24.22. In the second place, the elements of D may not remain constant through time. One reason for this, considered in Prais (169), are shifts in occupational structure brought about by economic forces and irrelevant to the question of social mobility. Prais proposes a method of correcting for these shifts and shows that when it is applied to (XXIV.5) the resulting adjustments are small.

24.23. In general, the detection of changes in coefficients is difficult requiring, as it does, the possibility of repeated observations. It may therefore be desirable to reinterpret the analysis as relating not to what will happen in historical time but to what would happen in a society governed always by the observed transition matrix.

24.24. In the third place, it may be inadequate to define the states of the transition matrix purely in terms of occupation. An example is provided by the principle of cumulative inertia proposed in McGinnis (134) as a means of accounting for some of the observed departures from the simple model when applied to the study of intragenerational mobility. This principle states that the more time an individual has spent in a state the longer is likely to be the total time he spends in it. This problem could be handled by defining states in terms of two criteria, occupation and time already spent in that occupation, instead of simply in terms of occupation. In intergenerational studies this would imply that account should be taken of the status of the paternal grandfather and even more remote ancestors.

XXV. EXAMPLES RELATING TO THE DISTRIBUTION OF INCOME, CONSUMPTION, ACCUMULATION AND NET WORTH

A. Introduction

25.1. The distributions which form the subject matter of this chapter have for long been the object of study. An interesting early example is the "scheme of the income and expense of the several families of England for the year 1688" contained in King (122). The classification is by ranks, degrees, titles and qualifications, that is by socio-occupational categories. For each category, estimates are made of: the number of families (including indoor servants); the average size of families (ranging from 40 in the case of temporal lords to two in the case of common soldiers and averaging a little over four); the number of persons (giving a total of just over five and a half million for the population of the country); the yearly income per family (ranging from £2,800 for temporal lords to £6.5 for cottagers and paupers, and giving £32 for the average family; the annual income (giving a total of £43.5 million); the income per head ranging from £70 to £2 and averaging £7.9; the expense per head ranging from £60 to £2.25 and averaging £7.56; the difference, that is accumulation (ranging from a saving of £10 to a dissaving of £0.25 and averaging out to a saving of about £0.34); and, finally, the total saving (or dissaving) which amounted approximately to £1.8 million made up of £2.4 million contributed by families in the saving categories and −£0.6 million contributed by the families in the dissaving categories. About 62 per cent of the families, containing 51 per cent of the population and possessing 21 per cent of the income, were estimated to be in the dissaving categories. This does not imply that all the families in these categories spent more than their income but only that they did so on average.

25.2. Attempts to describe the form of income distributions by means of a mathematical expression goes back to Pareto's famous "law" which appeared in Pareto (161, vol. 2) and states that the logarithm of the number of incomes exceeding a given level is a downward-sloping linear function of the logarithm of that level. As is well known, this relationship often gives a reasonable approximation to the upper tail of a distribution though it cannot describe the whole distribution.

25.3. The next step forward was the application of the log-normal distribution to many economic phenomena in Gibrat (79, 80) under the name of the law of proportionate effect. This distribution has been extensively analysed and illustrated in Aitchison and Brown (5) where it is shown that it provides a good description of the distribution of earnings by homogeneous groups of workers and, in general, that it is a strong candidate whenever a statistical description of income size distribution is required.

25.4. In 1936, Champernowne described to a meeting of the Econometric Society a different form of expression for the graduation of income distributions but it was only later published in full in Champernowne (42). In Thatcher (211), a paper concerned with the earnings of employees in which men and women are treated separately and full-time workers are distinguished from part-time workers, it is shown that there is evidence for the log-normal distribution for manual workers and the Champernowne distribution for full-year workers.

25.5. The generation of incomes has been treated as a stochastic process by a number of writers and, in particular, by Champernowne (43, 44, vol. 2, chapter 18, 45). By now a considerable amount of data exists on the changes of incomes from one group to another over given, usually annual, intervals and in some cases these data have been analysed in terms of transition matrices. More will be said about this work in section B below.

25.6. Another group of studies is directed to discovering the determinants of differences in income rather than with the form of the resulting distribution or a model of the generating process. We have seen an example of this in the work of Duncan, Featherman and Duncan (60). Other examples will be given in section C below.

25.7. So far we have been mainly concerned with the form of the distribution of original income, a process by which it might be generated and the factors which might be supposed to influence this process. In many countries, however, the final distribution is much affected by government policies in such matters as taxation, social security, public assistance and the free, or heavily subsidized, supply of goods and services. In section D below this process of redistribution will be exemplified, on the basis of information collected from a sample of households, and an attempt will be made to show how far, in the instance chosen, the results are compatible with the framework provided by the national accounts.

25.8. In concluding this section it may be useful to refer to Lydall (131) and Bronfenbrenner (36), two compendious works on the distribution of income which, in their different ways, may help to fill in the gaps of the treatment given here.

B. The process of income formation

25.9. In Champernowne (43, 44, vol. 2, chapter 18, 45) the formation of incomes is studied as a Markov process by means of transition models formally equivalent to those which have been used in many parts of this report. Income is divided into size groups and the movement of incomes from one group to another is traced over an interval of time. On the assumption that the observed transition proportions are fixed, the stable distribution to which the process tends can be worked out and compared with the observed distribution. The model can be set up in two different ways which have their counterparts in other fields dealt with in this report.

25.10. In the first place, the data may relate to a sample of individuals or households in existence at each end of a time interval and to the change in their income over the interval. If this is the case, then the sum of the entries in each column of the transition coefficient matrix is equal to one; in fact, this matrix is a *D*-matrix of the kind used in the study of social mobility as described in section C of the preceding chapter. The process which we can study with its help is one in which the income holders live for ever and their incomes are subject to endless transformations in accordance with the probabilities in the transition matrix.

25.11. In the second place, the data may relate to a sample of individuals who may leave the population of income holders through death or other reason and whose number may be added to through the appearance of new income holders who, on account of youth or other reason, were not income holders at the beginning of the period. This case corresponds to the open model based on a *C*-matrix; and this enables us to model a changing population of income holders.

25.12. These models are intended to throw light on the evolution of the distribution of income but not on the evolution of its absolute level. In most countries both prices and productivity tend to rise through time so that a transition matrix based on unadjusted data would tend to pile up income holders at the top end of the distribution since they would have no means of getting beyond the top income group recognized in the transition matrix. This tendency can be corrected by basing the transition matrix on adjusted income data, the adjustment consisting of multiplying all incomes at one date by a factor which will make their average the same as the average income at the other date.

25.13. An example of the first type of model, employing a *D*-matrix and based on adjusted income data, is provided in Vandome (270). It is based on information obtained in a reinterview survey carried out in connexion with the Oxford Saving Survey over the period 1952-54. Income is divided into twelve standard income classes so that the transition matrix is of order 12. Separate calculations were made for gross income and for net income, that is income after direct taxes. Gross income was adjusted as explained above and net income was adjusted so as to yield the same average gross income at the two dates. The results are set out in table 25.1.

Table 25.1. Distributions of adjusted gross and net income in Britain for 1953 and 1954 and their limiting values

(Percentages)

Range of gross or net income in £'s per annum	Adjusted gross income			Adjusted net income		
	1953	1954	Limit	1953	1954	Limit
0 - 99	3.5	3.4	3.4	3.5	3.4	3.1
100 - 199	13.6	14.1	13.9	15.9	15.7	14.7
200 - 299	12.5	12.4	11.5	13.2	12.9	12.7
300 - 399	15.3	15.8	15.3	15.1	17.4	18.1
400 - 499	17.1	13.0	11.4	18.3	13.5	11.8
500 - 599	11.2	15.5	14.6	14.5	19.4	19.9
600 - 699	13.3	13.5	13.3	9.1	7.5	8.3
700 - 799	4.5	3.5	3.1	4.0	4.1	4.7
800 - 899	5.1	4.5	3.7	3.6	3.9	4.3
1000 - 1499	2.6	3.0	4.3	1.8	1.2	1.0
1500 - 1999	0.5	0.4	0.9	0.3	0.6	0.9
2000+	0.8	1.0	4.6	0.5	0.4	0.5

25.14. Probably the most surprising feature of table 25.1 is the closeness of the limiting distributions, and especially the one for net income, to the observed distributions. The transition matrices were estimated from a small sample (429 successful reinterviews corresponding to a response rate of 66 per cent); and a limiting distribution, being the dominant characteristic vector of a transition matrix, depends entirely on that matrix and implies nothing about the initial distribution. The piling up of income holders in the higher ranges of the gross income distribution implies a tendency to increased inequality. But, as the author suggests, this may largely be due to the use of a *D*-matrix rather than a *C*-matrix so that income holders never disappear and it is impossible for a large income to be replaced, as a consequence of death duties, by a much smaller one. This influence could be expected to affect gross income much more than net income.

25.15. The same paper contains a number of other limiting distributions, specifically for contractual savings, durables, windfalls, unusual expenses and hire purchase. In the last four cases the observed distributions are all close to the limiting distributions. In the case of contractual savings, the limiting distribution represents a large movement up the scale compared with the observed distribution. While not a prediction, this result is plausible and in line with the changes that have been taking place over the past two decades.

25.16. It is shown in Thatcher (212) that the relative dispersion of the distribution of weekly earnings of men in full-time manual employment in Britain has hardly changed at all from 1886 to 1970 although over that period median earnings have increased about twenty-one fold. In Lydall (131) it is shown that there has been a similar stability over a period almost as long in Belgium, France and Germany.

25.17. Stability of this kind can be analysed in terms of the theory of stochastic processes and, specifically, by the method suggested in section D of chapter XII above in connexion with social stratification and mobility. If we measure an individual's earnings in a year as the logarithm of the ratio of his earnings to median earnings then we can form the regression equation

$$\Lambda \mathbf{y} = \mathbf{y}\beta + \mathbf{u} \qquad \text{(XXV.I)}$$

where the elements of the vector **y** are the measure of earnings for each of the individuals in the sample, β denotes a parameter and **u** denotes a vector of errors. From (XXV.1) we can estimate β and also the correlation coefficient, ρ say, between the logarithms of an individual's earnings this year and last year. Data, which have been described for the United Kingdom (225, No. 4, p. 4.29), are now available which enable these calculations to be made. In Thatcher (212) it is shown that $\beta = \rho$ approximately at all ages from 20 to 60 by five-year intervals and that the agreement is improved if about 1 per cent of the observations analysed are omitted on the ground that they show very extreme fluctuations of earnings. The data, which relate to males in full-time employment in 1964-1965 and 1965-1966, thus suggest that the changes in individual earnings that were taking place at that time were compatible with a lognormal distribution with constant variance.

25.18. Though voluminous, the data used in this study form only a small part of what has been collected, and will continue to be collected, by the Department of Health and Social Security in connexion with the administration of earnings-related social security benefits. This body of data relates not only to males but also to spinsters in full-time employment for individual years of age. The transition matrices are each of order 42 and based in each case on a sample of about 1,000 individuals. In Thatcher (212) nine of these, relating to male employees and compressed to order 9, are reproduced though, in the analysis described above, the regressions were based on the large matrices.

25.19. In Esberger and Malmquist (64) income transition matrices for 1952-1953 are given in which sex, marital status, industrial status and several age groups are distinguished. These matrices are used to calculate distributions for 1958 and limiting distributions, which are compared with the initial distributions in 1952.

25.20. In section D of chapter XXVIII below a short account is given of the forecasting model, described in Eriksen (63), which is used to estimate the future liabilities of the Swedish supplementary pension scheme. Income transition matrices form an integral part of this model.

25.21. In Mustert (143) an analysis is made of the increasing equality of incomes in the Netherlands after the second world war with the help of an income transition matrix. Allowance is made for the effect of rising prices and productivity and also for the net increase each year in the number of income holders. The available data consist of annual income distributions for the years 1950-1967 with the exception of 1951, 1956 and 1961 and of annual estimates of the net increase in income holders. It is not possible, therefore, to estimate the transition matrices directly nor to assign the net increase in income holders to particular income classes since they are only known in total. The construction of a fixed transition matrix, in which only limited movements are possible, and a fixed assignment vector for the net increase in income holders is carried out by minimizing over all pairs of successive years the squares of the discrepancies between the actual distributions and the distributions calculated from the model. This is done by means of quadratic programming. It is shown that the observed distributions can be rather closely approximated by a model based on a fixed and restricted transition matrix and a fixed assignment vector for the net increase in income holders. The limiting distribution of this system is not calculated.

C. Factors influencing individual incomes

25.22. Many different kinds of study form part of the subject matter of this section. Some of these are largely concerned with the relationship of income to age and with factors, such as education, occupation or health, which can be expected to influence this relationship. Others seek to discover how far variables which might be expected to influence individual incomes in fact do so, and how much of income differences can be accounted for by them. Some examples of these different studies will now be given.

25.23. In Dublin and Lotka (57), a revised edition of which appeared in 1946, an attempt was made to calculate the money value of a man at different ages of life. Although the authors made reference to the wider implications of their work, their main aim was practical: to provide some guidance on appropriate life insurance cover in different circumstances and on compensation for industrial injury. This led them to investigate many matters concerned with marital status and family composition, the cost of bringing up children, household consumption levels, age-income profiles and the effect on these of mortality and morbidity. A man starting at a particular income level at a given age can not only expect a future discounted income stream depending on such factors as his mortality expectations in relation to average experience, tax and interest rates and so on, but he can also expect to contract expenses, above those of his own maintainance, through marriage and begetting children who must then be maintained and educated. Some of these expenses will be terminated or modified before the death of the income earner through the death of other family members, divorce or the children growing up and forming their own families; and some expenses will survive the income earner if he tries to make provision for his widow and children after his death. A central feature of this study is the calculation of the money value of a man expressed as discounted net worth conditional on age, present income, relative mortality expectations and tax and interest rates.

25.24. In Becker (18) earnings are related to investment in human capital and, in particular, to investment in education. Rates of return to this form of investment at secondary school and university levels are analysed for different times and for different groups in the population; and age-earnings profiles are related to length of schooling. By disaggregation an attempt is made to handle the difficulty that the returns attributed to education are in fact attributable to other things, including ability.

25.25. In Fase (65) a statistical analysis is made of Dutch income data over the period 1958-1967. The author provides a model of the random path of income with respect to age for a given professional or educational category and shows how this path, and the corresponding expected lifetime income, can be estimated from cross-section data. He then proceeds to apply these methods to a large number of surveys. An interesting feature is that he is not only able to calculate discounted lifetime earnings but also their standard deviations. Thus, in 1964, at age 25, at a

4 per cent rate of interest, expressed in thousands of guilders and before tax, some of his estimates run as follows: for self-employed engineers, 1640 ± 1238; for salaried engineers, 496 ± 188; for self-employed physicians, 992 ± 572; for salaried physicians, 454 ± 194; for self-employed accountants, 520 ± 377; and for salaried accountants, 394 ± 149. A second interesting feature is that with a somewhat longer list of professions there is a positive rank-order correlation between lifetime earnings and social prestige. It would appear, therefore, that whatever these differentials are due to they do not represent an offset to lack of prestige.

25.26. In Klevmarken (123) statistical methods for the analysis of earnings data are described and applied to salaries in Swedish industry. A part of the study is devoted to the calculation of age-earnings profiles for different levels of education.

25.27. We come now to two examples of a rather different kind.

25.28. The influence of a number of social and demographic factors on the size of individual incomes is estimated in Adams (2). The study is based on cross-section data for the United States in 1949, collected by the Survey of Consumer Finances, and the techniques used are the analysis of variance and regression analysis. The dependent variable in the regression calculations is the logarithm of individual wage and salary income and the determining variables relate to age (six age groups), education (two groups, differently defined for white-collar and blue-collar occupations), occupation (three categories), region (two categories, South and other), community size (three categories), part of year worked (two categories). The following regression estimates were obtained: for age, 0.2003 ± 0.0188, and for the square of age, —0.0271 ± 0.0028, indicating a significant parabolic relationship between log income and age; for education, 0.0555 ± 0.0120; for occupation, 0.1351 ± 0.0100; for region, 0.0548 ± 0.0142; for community size, 0.0598 ± 0.0094; and for part of year worked, 0.2105 ± 0.0134. Thus all the regression estimates have the expected sign, each is significantly different from zero and the coefficient of multiple correlation is 0.66.

25.29. A somewhat similar analysis relating to Britain in 1953-1954 and based on data collected by the Oxford Savings Survey is given in Hill (95). Again the method used is the analysis of variance, applied separately to income and to log income. The determining variables, though differently grouped, are similar to those used in Adams (2) except that education and part of year worked are omitted and employing industry is included.

D. The redistribution of income

25.30. The example in this section relates to the redistribution of household incomes as a consequence of government taxes and transfers. This subject is the main concern of work in the United Nations Statistical Office (260) which was outlined in section B of chapter XIII above. No statistics have so far been presented in exactly the form proposed there (260) but studies of the incidence of taxes and social service benefits have been carried out in Britain for many years and this work will serve as an example.

25.31. The data for these analyses are obtained from a continuous family expenditure survey reported by the United Kingdom Department of Employment (230). In a series of papers by the United Kingdom Central Statistical Office (224) these data have been used to make detailed surveys of the redistributive effects of government policies. A representative tabulation of some of this material for 1969 is given in Stone and Stone (207), and this tabulation is reproduced in table 25.2 below.

25.32. The data in table 25.2 are arranged first by selected income ranges, and within ranges by household size and composition. The number of households on which the estimates in each of the rows is based is shown in the first column of the table; and it can be seen that no estimates are based on a sample of less than 10 households.

25.33. The starting point is original income, shown in column 4. This income concept is similar to retained factor income except that employers' contributions to national insurance and national health services are not included in it.

25.34. If we consider first the average results for the different income ranges we can see, by comparing the figures in columns 4 and 14 of table 25.2, that in the lowest range as much as 85 per cent of income after all taxes and benefits arises in the course of the process of redistribution: $(465 - 69)/465 = 0.85$ approximately. In the second range shown in the table the percentage falls to 37 per cent and in the third range it falls to 6 per cent. Beyond this point, original income exceeds income after all taxes and benefits and, on average, households make a net contribution, giving more than they gain in the redistributive process. The use of averages in this way, though it makes the general point that poor households gain and rich ones lose through redistribution, obscures the fact that the size and composition of the average household change as we go up the income scale. We can avoid this distortion by comparing the contribution of a given type of household in different income ranges. For instance, the net contribution of a household composed of two adults in the fifth and highest income range is £2,315 — 1,555 = 760; of the same type of household in the fourth income range, £1,313 — 949 = 364; in the third income range, £750 — 760 = –10; in the second, £418 — 717 = –299; and in the first and lowest, £82 — 541 = –459.

25.35. But the redistributive process operates not only to help poor families at the expense of rich ones but also to help large families, in particular families with many children, at the expense of small ones. For instance, if we concentrate on the fourth income range and look at households with two adults and nought up to four children, we find that the net contributions are £364, £282, £155, –£12 and –£133. Thus, while the households in this income range make, on average, a net contribution, those with three or four children are net beneficiaries. If we take the highest income range, we find that all the corresponding household types make a net contribution, the figures being £760, £613, £550, £322 and £68.

25.36. This information throws a great deal of light on the redistributive activities of the state. Substantially similar information is available from the United Kingdom Central Statistical Office (224) for odd years from 1957 to 1961 and thereafter for every year, so that changes in the incidence of taxes and social service benefits can be traced over a span of years. It must be recognized, however, that the estimates

Table 25.2. The effect of government taxes and transfers on different types of household. United Kingdom, 1969

(£'s a year)

Number of households in the sample	Range of original income	Household size and composition*	Original income	Direct benefits in cash	Direct benefits in kind	Income before tax	*less* Employees' contributions to national insurance	*less* Income tax and surtax	Income after direct taxes and benefits	Housing subsidies	*less* Indirect taxes paid directly	*less* Indirect taxes paid indirectly	Income after all taxes and benefits
1	2	3	4	5	6	7	8	9	10	11	12	13	14
606	Up to £259	1a	63	315	60	438	0	−2	436	16	−56	−26	369
368		2a	82	483	106	670	0	0	670	17	−102	−44	541
11		2a 2c	76	439	336	850	−11	26	865	3	−155	−66	646
18		3a	100	640	152	902	−10	−14	878	12	−126	−66	697
1,069	All households in the range		69	397	99	565	−1	−1	563	16	− 79	−35	465
43	£382–459	1a	421	178	40	637	−6	−38	593	10	−99	−37	467
51		2a	418	387	131	936	−7	−29	900	11	−136	−57	717
111	All households in the range		419	310	142	871	−8	−26	837	13	−131	−52	666
56	£676–815	1a	737	57	41	835	−33	−79	723	7	−118	−45	567
97		2a	750	226	100	1,076	−30	−68	978	11	−164	−67	760
27		2a 1c	771	92	186	1,048	−53	−25	970	17	−205	−77	705
16		2a 2c	753	160	193	1,106	−43	39	1,122	13	−176	−66	894
13		2a 3c	767	193	268	1,227	−38	9	1,198	21	−223	−93	903
16		3a	746	420	208	1,374	−40	−42	1,292	27	−203	−75	1,042
257	All households in the range		749	191	155	1,093	−34	−46	1,013	15	−167	−67	795
47	£1,196–1,447	1a	1,310	68	38	1,416	−43	−241	1,132	4	−199	−66	871
226		2a	1,313	84	64	1,461	−57	−165	1,239	14	−223	−82	949
141		2a 1c	1,324	34	156	1,514	−60	−118	1,336	12	−222	−84	1,042
155		2a 2c	1,329	72	234	1,635	−59	−112	1,464	13	−216	−87	1,174
53		2a 3c	1,332	153	344	1,827	−58	−106	1,663	22	−246	−95	1,344
26		2a 4c	1,308	177	486	1,971	−62	−81	1,828	6	−287	−106	1,441
66		3a	1,312	231	218	1,761	−64	−131	1,566	19	−271	−96	1,219
17		3a 1c	1,312	170	357	1,838	−68	−80	1,690	16	−258	−104	1,344
12		3a 2c	1,358	219	297	1,875	−72	−78	1,725	19	−254	−104	1,368
10		4a	1,294	398	170	1,862	−82	−140	1,640	28	−356	−133	1,180
788	All households in the range		1,319	110	191	1,621	−59	−134	1,428	15	−232	−88	1,123
12	£2,122–2,565	1a	2,345	31	29	2,404	−42	−492	1,870	1	−192	−83	1,594
160		2a	2,315	43	57	2,414	−78	−361	1,975	4	−318	−106	1,555
75		2a 1c	2,315	16	182	2,511	−73	−327	2,111	3	−297	−115	1,702
99		2a 2c	2,323	56	228	2,607	−65	−344	2,198	9	−314	−120	1,773
51		2a 3c	2,328	106	361	2,795	−64	−297	2,434	6	−301	−133	2,006
13		2a 4c	2,290	170	505	2,964	−65	−217	2,682	4	−331	−134	2,222
119		3a	2,312	85	156	2,553	−95	−317	2,141	15	−373	−126	1,657
42		3a 1c	2,338	49	278	2,663	−93	−259	2,311	16	−380	−146	1,801
29		3a 2c	2,338	110	460	2,908	−84	−247	2,577	5	−351	−148	2,083
30		4a	2,339	195	206	2,931	−113	−289	2,334	13	−412	−132	1,802
701	All households in the range		2,323	80	222	2,625	−83	−311	2,231	10	−342	−125	1,775
7,008	All households in the sample		1,519	160	179	1,858	−54	−204	1,600	13	−249	−94	1,271

* The symbol a denotes adult (person 16 and over) and the symbol c denotes child (person under 16).
Note: Components do not always add up to totals because of rounding-off errors.

are subject to sampling errors, so that some of the less numerous groups of households may not be represented quite fairly. For instance, in the case of households consisting of two adults and one child in the third income range, the income after all taxes and benefits, £705, looks somewhat low and out of line, particularly in relation to the comparatively high figure of original income, £771. But sampling errors have to be accepted, partly because there is need for a wide variety of information that can best be collected by sampling methods and partly because sample surveys are expensive and their coverage cannot be expanded indefinitely. With a survey that is well designed and carried out they can do very little harm, provided the reader is aware of their existence and makes allowance for them in interpreting the figures he reads.

25.37. The main results for all households in the sample can be compared with the results for the personal sector as a whole as given in the national accounts for the United Kingdom (223). It must be borne in mind that the personal sector contains, in addition to households, private non-profit institutions though these only form a very small part of it. Further, for comparability with the national accounts, we must add back employers' contributions to original income and omit the benefits in kind shown in column 6 of table 25.2.

25.38. With these adjustments we obtain the following series for the average household in the sample: original income, £1,572; income before tax, £1,732; disposable income, £1,421; income after all taxes and benefits, £1,116. If original income is put at 100, the series runs: 100, 110, 90, 71. The comparable series based on the national accounts runs: 100, 111, 90, 73. It appears, therefore, that in this case the detailed information obtained from a sample survey fits fairly well into the broad framework provided by the national accounts.

XXVI. EXAMPLES RELATING TO HOUSING AND ITS ENVIRONMENT

A. Introduction

26.1. The subject matter of this chapter covers a wide range of topics from the structure of the housing stock, the factors at work to change it (construction, demolition, conversion and modification), the influences, structural and environmental, which determine house prices and occupancy. All of these topics relate to individual dwelling units but there are others of a wider character such as urban development, problems of traffic planning and control, data banks on land use and road systems and, finally, the tendency to urban growth and increasing population density which leads to a variety of problems in many parts of the world.

26.2. In spite of these many possibilities, only a single example will be given to illustrate the subject matter of this chapter. This example relates to the structure of occupancy in Britain which, as was noted in section A of chapter XIV above, has greatly changed in the past quarter of a century.

B. The occupancy transition matrix

26.3. At all times, households are changing their form of occupancy: tenants may move to a home owned by themselves; tenants of a private landlord may become tenants of a public authority; tenants of furnished accommodation may move to unfurnished accommodation; and so on.

26.4. Enquiries into the housing situation were carried out in respect of England and Wales in 1960 and 1964 and were reported in Gray and Russell (88) and in Woolf (288). If we combine some of the information contained in these reports with material available in the housing volumes of the 1961 and 1966 population censuses, we can arrive at the very tentative stock-flow matrix for household occupancies, relating to the four and a half years from mid-1960 to end-1964, set out in table 26.1 below.

26.5. Although table 26.1 is only approximate, there can be no doubt about the considerable movement among forms of occupancy which it shows. Let us therefore calculate a *C*-matrix from this table and work out how different occupancies would change through time if the transition matrix were fixed and the new entry vector shown in the table were repeated in every interval of four and a half years.

Table 26.1. Stock-flow matrix for household occupancies in England and Wales, mid-1960 to end-1964

(Thousands)

State at end-1964 \ State at mid-1960		New households	England and Wales 1	2	3	4	5	Totals
Households terminated			150	216	299	48	28	
England and Wales: Owner occupation	1	474	5806	92	371	123	21	6887
England and Wales: Local authority tenancies	2	119	47	3130	349	51	81	3777
England and Wales: Private unfurnished tenancies	3	240	62	45	2800	109	50	3306
England and Wales: Private furnished tenancies	4	123	17	5	14	243	34	436
England and Wales: Other tenancies	5	45	17	17	32	27	284	422
Totals			6099	3505	3865	601	498	

26.6. The *C*-matrix is given by

$$C = \begin{bmatrix} 0.9520 & 0.0262 & 0.0960 & 0.2047 & 0.0422 \\ 0.0077 & 0.8930 & 0.0903 & 0.0849 & 0.1627 \\ 0.0102 & 0.0128 & 0.7245 & 0.1814 & 0.1004 \\ 0.0028 & 0.0014 & 0.0036 & 0.4043 & 0.0683 \\ 0.0028 & 0.0049 & 0.0083 & 0.0449 & 0.5703 \end{bmatrix} \qquad \text{(XXVI.1)}$$

If we multiply the mid-1960 stock vector by *C* and add in the new entrants to end-1964 we obtain the end-1964 stock vector; and if we repeat this operation we obtain a series of successive stock vectors separated by an interval of four and a half years. If we divide the elements of a vector by their sum we obtain the proportionate distribution of households over occupancy classes. This is done for the period mid-1960 to end-2009 in table 26.2 below.

26.7. Although the tendencies shown in table 26.2 are based on incomplete sample data for the early 1960s, they have, broadly speaking, been borne out by events up to now: owner-occupation and local authority tenancies have increased considerably; and all private and other tenancies have diminished.

Table 26.2. Tentative trends in the composition of household occupancies in England and Wales

(Percentages)

	Mid 1960	End 1964	Mid 1969	End 1973	Mid 1978	End 1982	Mid 1987	End 1991	Mid 1996	End 2000	Mid 2005	End 2009	Limit
Owner-occupation	42	46	50	53	55	57	58	60	61	62	63	63	70
Local authority tenancies	24	25	26	26	26	26	25	25	25	24	24	23	19
Private unfurnished tenancies	27	22	19	17	15	13	12	12	11	11	10	10	8
Private furnished tenancies	4	3	2	2	2	2	2	2	2	2	2	2	1
Other tenancies	3	3	2	2	2	2	2	2	2	2	2	2	1

26.8. Looking into the future, the table suggests that, while owner-occupation may rise monotonically and private and other tenancies may fall monotonically, local authority tenancies are likely first to rise and then to fall. The highest proportion can be expected around the mid-1970s according to these calculations.

26.9. The final column headed "limit" in table 26.2 is obtained by using equation (VII.13) in chapter VII above. If the new entry vector is constant, as it is by assumption in the present case, the stock vector is given by premultiplying the new entry vector by $(I-C)^{-1}$. In the limit, the system is not only stable but stationary, the new entrants in a period into each occupancy class exactly balancing the leavers.

26.10. Thus the table shows that although owner-occupation and local authority tenancies have been rising in recent years it does not follow that they will continue to rise, still less that they will eventually replace all other forms of occupancy. Though plausible to date, the projections set out in table 26.2 may eventually turn out to be bad predictions since they represent no more than the consequences of an endless repetition of the changes that were taking place in the first half of the 1960s.

26.11. There are two further points that should be made in connexion with this example.

26.12. In the first place, the material allows the population to be divided into two parts, the Greater London Council (GLC) area and the rest of England and Wales. When this division is made it is evident that the population is far from homogeneous: not only are the composition vectors quite different in the two regions but the population of the GLC area was falling in the early 1960s whereas the population of the rest of the country was rising. The initial and final stock composition vectors for the rest of England and Wales are somewhat similar to those for the country as a whole being respectively { 43 25 25 3 4 } and { 75 17 6 1 1 }. But the GLC area follows a quite different pattern, the two vectors being respectively { 38 18 32 9 3 } and { 46 24 22 6 1 }.

26.13. In the second place, the assumption of a new entry vector which remains constant means that the projections are made without regard to the probable future growth of the population. The number of households will increase or diminish according to what was happening in the base period but its rate of change will gradually slow down until, as we have seen, the number of households eventually reaches a limit. In order to obtain realistic population estimates in the future it would be necessary to allow the elements of the new entry vector to grow in line with the expected growth in the number of households.

26.14. Thus to turn this example from an illustration of method into a substantive study of changing occupancy it would be necessary to do three things. First, improve the basic data which, as we have seen, were put together from not altogether concordant sources; second, consider any changes that may have taken place or may take place in the future in the coefficients of the transition matrix; and, finally, allow, as well as possible, for expected changes in the size and composition of future new entry vectors.

XXVII. EXAMPLES RELATING TO THE ALLOCATION OF TIME AND THE USE OF LEISURE

A. Introduction

27.1. In one way or another time enters as an important variable into most of the areas of social life with which this report is concerned. The concept of the life table, which is fundamental in the general study of demography, can also be used in more specialized fields, such as the analysis of the probable duration of unemployment. Many problems arise in connexion with education, employment and health in which it is necessary to calculate the time likely to be spent in different activities or states.

27.2. A number of examples of such problems are given in chapters XXIX through XXXI below. But the treatment there is largely in terms of probabilities and does not touch on the availability of time and its allocation between alternative uses.

27.3. In this chapter examples will be given of attempts to make a detailed accounting of the use of time which throw light on such questions as the internal economy of the household, the use of free time, traffic congestion and the planning of facilities for students.

B. The Time-Budget Project

27.4. The full title of this project is the Multinational Comparative Time-Budget Research Project and it is fully reported in Szalai (210). This immense report, the work of many hands, is made up of four parts. The first deals with the organization, methods and approaches of the project; the second with a series of studies based on the data collected; the third with a wide range of statistical tables, which open up great opportunities for further analysis; and the fourth with a bibliography of the project and a selection of time-budget literature arranged by country.

27.5. The project was inaugurated in 1963 and the collection of data was undertaken in the mid-1960s. Many research institutes in 12 countries collaborated. The locations studied were essentially urban and industrial and so it is to this aspect of life that the findings relate. Information is provided on the amount of time spent in the course of the day in a wide range of primary and secondary activities, on the sequence of these activities and on where and with whom they take place. Separate tabulations are available for different types of individual, employed men, employed women, housewives, and for different types of days, workdays, days off, Sundays. Detailed information is given of the characteristics and circumstances of the individuals and households sampled in each of the 12 countries.

27.6. The statistical tables in part Three of the report, together with the accompanying definitions, classifications and technical notes, occupy over 330 pages. Only the barest indication of this mass of material can be given here. Three topics will be chosen: the general picture; the household economy; and the use of free time.

1. The general picture

27.7. A summary picture is presented in table 27.1 in terms of the time spent in primary activities grouped into very broad categories. Primary activities are not the most time-consuming activities in which people are engaged but the principal activity in which they are engaged at any one time: a man who reads a newspaper at breakfast is engaged primarily in eating and secondarily in reading. Thus the $24 \times 60 = 1{,}440$ minutes of the day can be allocated to primary activities. In the report under discussion there are 99 activities which are grouped to form 37 categories. These categories are again grouped to form a smaller number of classes. Here the material is reduced to four classes which follow the grouping in the report except that personal (as opposed to leisure) travel has been assigned the class "household and children". The class "work" includes not only the time spent at the workplace but also the time spent in the journey to work.

27.8. This table relates to the 15 studies of the project which were conducted in 12 countries. The adult population is divided into three types: employed men, employed women and housewives; and days are divided between workdays and days off or, in the case of housewives, between weekdays and Sundays.

27.9. As is perhaps inevitable with such broad categories a fairly general pattern of time allocation seems to emerge from table 27.1. There is, however, a considerable amount of variation between countries. For instance, in Maribor all groups in the community appear to devote a relatively large amount of time to household and children; whereas in Lima-Callao at least the economically active groups seem to devote relatively little time to this activity.

27.10. Inspection of the table seems to reveal some interesting similarities and differences. For instance, while the patterns of time allocation made by employed women on their days off and by housewives on Sundays differ from country to country, they appear to be relatively alike in any one country.

27.11. This and other hypotheses could be tested and, in view of the many details of individual and household characteristics given in the report, an attempt could be made to associate differences in patterns with these characteristics. If these attempts were successful, we might be able to build up a more uniform picture of time allocation in urban, industrial societies and of the circumstances in which differences are to be expected.

2. The household economy

27.12. In the national accounts, consumer goods and services are accounted for up to the point at which they reach households but the further transformations which they undergo at the hands of household members are not recorded. For the main purposes for which the national accounts are designed this convention is not

Table 27.1. Minutes per day spent in primary activities grouped into very broad categories

(Minutes)

		Belgium	Kazanlik, Bulgaria	Olomouc, Czechoslovakia	Six cities, France	100 electoral districts, Fed. Rep. Germany	Osnabrück, Fed. Rep. Germany	Hoyerswerda, German Dem. Rep.	Gyõr, Hungary	Lima-Callao, Peru	Toruń, Poland	Forty-four cities, U.S.A.	Jackson, U.S.A.	Pskov, U.S.S.R.	Kragujevac, Yugoslavia	Maribor, Yugoslavia
	Employed men (workdays)															
1	Work	559	560	542	583	600	562	620	598	558	563	565	570	506	508	560
2	Household and children	49	96	109	75	54	59	103	102	49	91	72	77	113	85	119
3	Personal needs	615	597	570	621	613	602	533	567	600	560	589	572	573	593	559
4	Free time	217	187	219	161	173	217	184	173	233	226	212	217	248	254	202
	Employed men (days off)															
5	Work	90	81	79	48	45	29	42	66	61	44	27	33	14	97	47
6	Household and children	110	257	197	170	162	150	227	181	82	167	205	195	207	125	238
7	Personal needs	715	700	715	757	741	748	707	718	739	696	691	686	670	677	688
8	Free time	525	402	449	465	492	513	463	475	558	534	517	520	549	541	467
	Employed women (workdays)															
9	Work	454	522	436	492	423	425	507	527	434	490	480	482	478	429	502
10	Household and children	190	188	301	208	267	227	268	260	175	250	200	211	257	260	292
11	Personal needs	623	588	561	621	610	611	537	538	634	543	580	590	546	568	530
12	Free time	173	142	141	119	139	177	127	115	197	157	179	157	159	183	116
	Employed women (days off)															
13	Work	49	42	58	24	13	28	17	13	61	36	11	6	17	9	25
14	Household and children	274	403	413	315	307	269	461	448	266	326	344	322	445	370	464
15	Personal needs	695	673	680	747	755	742	678	692	689	681	684	687	625	635	679
16	Free time	422	320	289	354	365	401	284	287	424	397	400	421	353	426	273
	Housewives (weekdays)															
17	Work	17	1	24	4	12	10	7	55	5	3	6	8	4	12	13
18	Household and children	511	550	569	547	531	516	584	617	521	594	504	495	580	483	678
19	Personal needs	650	657	633	667	662	665	625	630	664	625	617	618	617	617	615
20	Free time	262	232	214	223	235	249	224	138	250	218	311	317	239	328	134
	Housewives (Sundays)															
21	Work	8	0	12	0	6	2	0	33	0	0	0	0	0	6	14
22	Household and children	275	457	408	376	278	241	431	435	373	323	293	347	403	447	537
23	Personal needs	703	650	736	720	741	773	680	678	682	704	650	667	650	601	630
24	Free time	454	333	284	344	415	423	329	294	385	413	495	424	387	386	259

Note: Components do not always add up to 1440; the totals range from 1441 to 1436.

only convenient but positively desirable since the addition of a large and very uncertain sum to the accounts would contribute little, if anything, to the study of the relationships between households, businesses and government. For other purposes, however, the calls of household activities on the time and capacities of the members of the household is of interest. Evidently this is a field to which time budgets can contribute and some information is provided in table 27.2 below. This table is made up of entries 5 through 13 in the short list of Szalai (210) and so the column totals here differ from the entry "household and children" in table 27.1 above by the omission of personal travel.

27.13. Table 27.2 shows the time spent on average by various types of family member on home duties of one kind or another. The table provides a broad picture of the contributions made by different members on different types of day and on the extent to which, on average, different duties are more or less time-consuming. It would be interesting to take the analysis further and to examine the position in households of different size and composition and at different stages of the life cycle. For instance, cooking and cleaning, which are always needed, appear generally as time consuming; whereas child care appears to consume relatively little time. This is probably due to the fact that child care is largely concentrated on small children, who are present in only a limited proportion of families. The material in the report enables the analysis to be carried much further and one of the papers in part Two is devoted to a comparison of child care in the 12 countries.

Table 27.2. Minutes per day spent in primary activities connected with the household and children

(Minutes)

		Belgium	Kazanlik, Bulgaria	Olomouc, Czechoslovakia	Six cities, France	100 electoral districts, Fed. Rep. Germany	Osnabrück, Fed. Rep. Germany	Hoyerswerda, German Dem. Rep.	Gyôr, Hungary	Lima-Callao, Peru	Toruń, Poland	Forty-four cities, U.S.A.	Jackson, U.S.A.	Pskov, U.S.S.R.	Kragujevac, Yugoslavia	Maribor, Yugoslavia
	Employed men (workdays)															
1	Cooking, preparing meals	3	7	14	8	2	1	16	7	3	10	5	8	13	5	10
2	Cleaning, washing up	5	15	13	9	2	3	17	12	5	11	5	7	8	3	7
3	Laundry, mending	1	1	3	1	0	1	4	2	2	4	1	1	3	2	3
4	Child care	6	13	18	8	6	7	15	17	4	20	8	8	30	11	16
5	Shopping, gardening and other	25	43	48	40	43	44	43	57	22	35	32	34	43	49	73
	Employed men (days off)															
6	Cooking, preparing meals	5	49	31	13	6	7	38	9	4	27	11	8	22	11	18
7	Cleaning, washing up	12	34	34	23	14	14	37	20	23	32	22	40	16	9	21
8	Laundry, mending	2	5	14	2	3	1	7	2	0	7	2	0	4	3	5
9	Child care	10	12	21	19	16	10	39	27	13	36	19	16	32	14	25
10	Shopping, gardening and other	64	118	84	94	117	110	91	113	20	57	101	88	97	71	154
	Employed women (workdays)															
11	Cooking, preparing meals	49	56	79	45	61	51	63	66	54	67	41	42	74	72	84
12	Cleaning, washing up	69	46	56	70	89	76	72	62	32	53	57	45	45	60	68
13	Laundry, mending	18	18	49	24	30	31	43	52	34	43	19	32	39	43	58
14	Child care	14	21	30	24	28	23	33	26	14	27	18	16	30	24	26
15	Shopping, gardening and other	27	29	71	34	54	40	42	37	24	37	43	45	39	39	38
	Employed women (days off)															
16	Cooking, preparing meals	62	122	134	72	81	67	111	138	63	108	62	58	103	133	138
17	Cleaning, washing up	97	97	94	111	99	88	136	129	33	88	92	82	72	86	97
18	Laundry, mending	20	65	85	44	33	20	85	65	53	34	42	33	75	59	78
19	Child care	18	26	46	32	20	12	67	56	33	53	29	23	70	40	44
20	Shopping, gardening and other	56	58	44	43	70	73	47	48	52	28	79	88	78	39	90
	Housewives (weekdays)															
21	Cooking, preparing meals	122	155	150	102	130	111	117	155	165	149	99	110	153	161	173
22	Cleaning, washing up	170	110	122	164	155	171	159	130	85	117	132	131	116	100	130
23	Laundry, mending	81	65	73	76	72	56	108	101	119	111	71	69	79	60	100
24	Child care	49	62	101	104	64	66	106	52	56	74	81	82	59	34	47
25	Shopping, gardening and other	60	131	105	74	104	101	75	149	53	101	82	66	124	89	194
	Housewives (Sundays)															
26	Cooking, preparing meals	110	174	160	101	115	99	152	176	154	137	89	102	110	185	172
27	Cleaning, washing up	108	84	94	126	100	87	122	112	54	88	69	94	94	132	103
28	Laundry, mending	7	31	33	24	8	2	41	26	61	17	11	0	27	21	75
29	Child care	17	0	42	92	34	30	99	23	29	48	57	60	56	26	57
30	Shopping, gardening and other	25	104	62	24	20	18	15	89	46	23	45	57	80	58	120

3. The use of free time

27.14. Some information on the use of free time is set out in table 27.3 below on the same lines as were adopted in the two earlier tables of this chapter. The column sums in each panel are equal to the numbers in the final row of the corresponding panel in table 27.1.

27.15. The numbers shown in table 27.3 are for the most part highly aggregated. Thus "study and participation" includes not only all forms of learning but also religious, civic and political activities and participation in activities at the workplace. Television viewing is the only homogeneous group and it would stand out as the greatest single primary use of free time in most countries if the other categories were divided into their components. The category "other" is highly heterogeneous being made up of social visits, parties, visits to theatres and museums, hobbies, conversation, resting and many other pursuits. It is of interest that listening to the radio and conversation appear everywhere as the two outstanding secondary activities.

27.16. Not surprisingly, the amount of free time and the pattern of its use differ markedly between workdays and days off; but at this level of aggregation, although in general men have more free time than women especially on their days off, the differences in amounts and patterns are perhaps less than might be expected.

Table 27.3. Minutes per day spent in primary activities connected with the use of free time

(Minutes)

		Belgium	Kazanlik, Bulgaria	Olomouc, Czechoslovakia	Six cities, France	100 electoral districts, Fed. Rep. Germany	Osnabrück, Fed. Rep. Germany	Hoyerswerda, German Dem. Rep.	Győr, Hungary	Lima-Callao, Peru	Toruń, Poland	Forty-four cities, U.S.A.	Jackson, U.S.A.	Pskov, U.S.S.R.	Kragujevac, Yugoslavia	Maribor, Yugoslavia
	Employed men (workdays)															
1	Study and participation	11	21	32	9	11	16	27	25	29	25	16	27	52	23	19
2	T.V. viewing	74	13	64	45	58	72	71	35	35	68	78	89	41	28	45
3	Reading, radio, cinema	47	70	50	31	32	37	30	44	27	49	38	25	84	64	43
4	Active sports and outdoors	6	20	6	7	18	15	7	13	12	8	9	7	16	10	15
5	Other	79	63	67	69	54	77	49	56	130	76	71	69	55	129	80
	Employed men (days off)															
6	Study and participation	30	17	35	25	22	21	54	28	7	48	48	38	57	17	26
7	T.V. viewing	115	31	139	106	63	107	131	79	82	132	164	180	86	60	70
8	Reading, radio, cinema	88	83	79	47	48	69	46	73	88	99	67	53	159	85	72
9	Active sports and outdoors	39	70	37	41	138	96	52	77	39	39	23	31	91	54	74
10	Other	253	201	159	246	221	220	180	218	342	215	215	218	156	325	225
	Employed women (workdays)															
11	Study and participation	10	17	16	7	5	8	14	15	19	23	15	17	27	14	10
12	T.V. viewing	64	8	36	28	41	53	52	31	40	37	55	35	44	30	32
13	Reading, radio, cinema	32	39	32	19	25	19	15	27	19	33	23	30	49	27	24
14	Active sports and outdoors	4	11	8	2	8	9	5	6	9	6	5	4	8	3	5
15	Other	63	67	49	63	60	88	41	36	110	58	81	71	51	109	45
	Employed women (days off)															
16	Study and participation	25	9	14	19	14	21	14	5	4	42	26	28	28	13	9
17	T.V. viewing	73	29	83	87	61	66	98	65	119	103	89	131	46	74	44
18	Reading, radio, cinema	61	51	57	33	53	48	24	43	31	63	42	33	95	46	34
19	Active sports and outdoors	34	32	21	21	82	65	33	32	67	21	7	15	28	14	32
20	Other	229	199	114	194	155	201	115	142	203	168	236	214	156	279	154
	Housewives (weekdays)															
21	Study and participation	5	17	6	4	4	12	15	5	6	6	27	19	6	2	1
22	T.V. viewing	94	12	59	50	75	66	76	38	65	71	88	101	58	27	32
23	Reading, radio, cinema	33	21	37	25	27	32	21	32	19	38	35	32	73	30	25
24	Active sports and outdoors	6	13	17	9	26	23	28	8	5	8	4	3	14	5	7
25	Other	124	169	95	135	103	116	84	55	155	95	157	162	88	264	69
	Housewives (Sundays)															
26	Study and participation	36	0	10	15	21	19	2	17	28	38	63	56	0	5	3
27	T.V. viewing	119	61	64	120	74	114	125	62	76	109	123	111	117	53	38
28	Reading, radio, cinema	29	83	81	18	26	37	29	55	24	69	53	35	118	32	34
29	Active sports and outdoors	18	40	26	18	117	89	55	28	44	20	0	6	40	24	34
30	Other	252	149	103	173	177	164	118	132	213	177	256	216	112	272	150

C. Students' daily activities

27.17. References have already been made, in section F of chapter VIII and in section B.1 of chapter XV, to the work of Tomlinson and others (218, 219) on the problems of modelling the daily activity of students. The collection of weekly time-budgets from students not only enables the model described in section F of chapter VIII to be applied but also makes it possible to derive other interesting information.

27.18. One example of this is the correlation matrix of time spent by individual students on different activities. The matrix in table 27.4 below, taken from Tomlinson and others (219), relates to times spent by students at the University of Reading over a working week of five days and four nights, or approximately 110 hours.

27.19. Since the complete correlation matrix is symmetric, all the information is contained in the coefficients on one side of the diagonal. For instance, all the correlations with eating are contained in row and column 5 of table 27.4.

27.20. With the sample size of this example the correlation coefficients begin to be significantly different from zero at values of ± 0.1 or greater. To the extent that correlations are significant, it can be seen that nearly all of them are negative reflecting the fact that uses of time tend to be competitive. The exception to this statement appears at the intersection of row 9 and

Table 27.4. Correlation matrix for time spent on different activities by students at the University of Reading

		1	2	3	4	5	6	7	8	9
1	Academic work	1.00								
2	Travel	-0.26	1.00							
3	Shopping	-0.17	0.04	1.00						
4	Domestic	-0.08	0.01	0.09	1.00					
5	Eating	0.04	0.01	-0.05	-0.06	1.00				
6	Sleeping	-0.10	0.02	0.04	-0.14	0.11	1.00			
7	Sport	-0.19	0.08	-0.04	-0.03	-0.07	0.01	1.00		
8	Leisure	-0.62	-0.08	-0.02	-0.18	-0.17	-0.14	0.03	1.00	
9	Other	-0.11	0.21	-0.01	-0.10	-0.04	-0.15	-0.15	-0.18	1.00

column 2; and the reason for this is that the category "other" contains activities outside Reading and so is positively correlated with travel.

27.21. Detailed time budgets provide the means of constructing transition matrices showing the frequency with which any activity follows a given activity. Several examples of such matrices are given in Bullock and others (38), which forms part of the study under discussion. It seems doubtful, however, whether these matrices can be used as the basis for models of movement as long as states are defined simply in terms of activities.

27.22. The main content of Tomlinson and others (219) is a detailed application to student movements in time and space of the model described in section F of chapter VIII above. It is shown that the method is not a purely mechanical one and that considerable care is needed in defining categories and in choosing the basis on which the *a priori* probabilities are to be calculated. It is also shown that the model is reasonably successful in reproducing the observed distributions of students and in indicating how these will change in response to limited changes in environmental circumstances, provided always that the initial allocations of time to different activities to not change in the aggregate.

XXVIII. EXAMPLES RELATING TO SOCIAL SECURITY AND WELFARE SERVICES

A. Introduction

28.1. Social security and welfare services give rise to a large amount of regular statistics, much of it of an actuarial character, as exemplified by the detailed tabulations in respect of industrial accidents prepared each year by the Italian National Institute for Insurance against Accidents at Work: see, for instance, data for Italy (114). This example could undoubtedly be repeated for many other countries and there is no lack of publications in which such material is subjected to statistical or actuarial analysis. It seems more difficult, however, to find studies which reflect the ideas of connectedness emphasized in this report. In the end three examples have been chosen: the first is a study of the macro-economic impact of social security throughout the world; the second is concerned with the distributional effects of Medicaid and Medicare; and the third describes the model used in 1972 by the Swedish National Social Insurance Board in connexion with the Swedish supplementary pensions scheme.

B. The macro-economic impact of social security

28.2. The results of an enquiry into this subject have been described by the International Labour Office (113). The method adopted is to set up a simplified national accounts framework in which social security is a separate sector and then to spell out the relationships connecting the entries in the accounting matrix. This makes it possible to calculate a number of ratios and growth rates indicative of the impact of social security on the economy. Calculations on these lines are made for between 30 and 60 countries drawn from all parts of the world.

28.3. The accounting framework consists of a production account, income and outlay and capital transactions accounts for four sectors, an account for foreign transactions, a revaluation account and opening and closing balance sheets. The four sectors are enterprises, households and non-profit institutions, social security institutions and general government. The entries in this system are elaborated so as to show in greater detail transactions in which social security institutions are involved. These institutions are defined as those concerned with social insurance, family allowances, provisions for civil servants and the armed forces, public health services, public assistance and provisions for war victims.

28.4. On this basis it is possible to compare for different countries the composition of receipts and expenses connected with social security, their relationship to the gross national product, their changes between the early post-war period and the mid-1960s and their annual growth rates.

28.5. A table is given (table XXI) in which the percentage of the gross national product spent on public social services by 43 countries in 1963 is related to the gross domestic product per head expressed in U.S. dollars. The observations lie scattered around a roughly parabolic curve, starting at a very low level in very poor countries, rising to about 14 per cent at around the income level of Western Europe and then falling again as that income level is exceeded.

C. The distributional impacts of Medicare and Medicaid

28.6. Medicare and Medicaid were introduced in the United States as amendments, passed in 1965, to the basic Social Security Act. Both schemes were designed to assist, by the direct payment of medical expenses incurred, groups in society which, in the past, had received little help from the Government in meeting their medical bills. Medicare can be described as a highly subsidized medical insurance scheme intended to help the elderly; Medicaid on the other hand is a transfer scheme designed to help the poor and drawing its finance partly from federal and partly from state governments. The provisions made under Medicaid vary from state to state and introduce a considerable amount of regional disparity into this form of assistance.

28.7. A detailed study of the distributional impacts of these schemes is made in Stuart and Bair (208), who bring out the following points.

28.8. First, in the fiscal year 1968 some $8.6 thousand million, or about one and a half percent of total disposable income, were transferred from taxpayers to beneficiaries. By far the larger redistributive effect was exercised by Medicaid. The average gain of Medicare households was $197, equivalent to $3.35 per dollar of contributions; the average gain of Medicaid households, on the other hand, was $852, equivalent to $33 per dollar borne by the recipient. It must be recognized that these figures do not represent entirely new benefits but were in part a replacement of benefits available under earlier arrangements.

28.9. Second, in making comparisons through time it should be borne in mind that one of the responses to the schemes was a reduction in charitable care and an increase in fees on the part of physicians.

28.10. Third, on the whole the schemes resulted in a substantial redistribution of income from rich to poor but the regional incidence of this effect was highly variable, particularly in the case of Medicaid.

28.11. Finally, under both schemes, interstate differentials are substantial. Some states gain considerably while others lose.

D. The Swedish supplementary pensions scheme

28.12. In 1972 a forecasting model, described in Eriksen (63), was applied to estimating the future liabilities of the scheme. The model illustrates the use in combination of several of the methods described in this report.

28.13. The calculations are made by individual years up to the year 2000. Insured persons are char-

acterized by age, sex, insurance status and income; and to these numbers unit costs and benefits must be applied in order to calculate contributions and pension payments. The model can be described in four stages.

28.14. Starting with an initial stock of insured persons, that is the active population and individuals with old-age and invalidity pensions, and of their dependants, the first stage is a demographic forecast one year ahead. This requires: sex, age and insurance status specific death rates; the probability that a deceased man of a given age will leave behind a widow of a given age; and the probability that a deceased man of a given age will leave behind a given number of children of specified ages.

28.15. The second stage is to calculate the insurance status of the population at risk, which is done by means of transition probabilities, and at the same time to make allowance for migration.

28.16. The third stage is to calculate individual age-income profiles. This is also done by means of transition probabilities since, after a thorough examination, it was decided that income movements could be described with sufficient accuracy by a Markov process. At this stage allowances have to be made for the tendency for both real incomes and consumer prices to rise through time.

28.17. The final stage consists of calculating the new pensioners coming into being in the first interval, the population at risk at the end of the interval and the calculation of contributions and pension payments.

28.18. This scheme of calculations is repeated year after year. In working out the effect of the forecasts on the National Pension Fund, calculations are made on different assumptions about the rate of interest. All these calculations are set out in considerable detail in Eriksen (63).

XXIX. EXAMPLES RELATING TO LEARNING ACTIVITIES AND EDUCATIONAL SERVICES

A. Introduction

29.1. In the following sections a number of examples are given starting with a stock-flow matrix which can be used for making projections by the methods described in section C.1 of chapter VII above and ending with some cross-country studies and comparisons.

29.2. References to many further examples have been published by the OECD (155) which not only describes a large number of applications of analytical methods to problems of educational planning but also refers to a number of earlier bibliographies.

B. Stock-flow matrices and projections

29.3. A good example of the construction of stock-flow matrices and their use in making projections is provided in Armitage, Smith and Alper (9). Table 29.1 below reproduces the data in their table 2.6 rearranged in the standard format of table 7.1 and subjected to some re-ordering of educational states.

29.4. In table 29.1 the male population, past the point of entry into primary school, is assigned to sixteen states which can be grouped into three categories: pupils and students, teachers and others. The final row of the table shows the number in each of the sixteen states at new year 1961 and the final column of the table shows the corresponding numbers at new year 1962. The new entrants into the system, that is the boys going to primary school for the first time in 1961, appear at the intersection of row 1 and column 0; and the leavers, in effect deaths in 1961, appear at the intersection of row 0 with the various columns.

29.5. A matrix of transition proportions, the C-matrix of chapter VII above, can be formed by dividing the entries in columns 1 to 16 by the respective column totals.

29.6. On the assumptions that future new entrants are known and that the C-matrix remains constant, projections can be made by means of equation (VII.5) above which provides the vector $\Lambda^{\tau}\mathbf{n}$ for $\tau = 0,1,2,\ldots$. From this the whole stock-flow matrix can readily be constructed. Estimates of these kinds are given in Armitage, Smith and Alper (9, tables 2.8 and 2.9) starting from the stock vector for 1964. The complete matrix relates to 1970-71 and the stock vectors to 1965 through 1974.

29.7. As we have already seen, it is most unlikely that all the transition proportions will remain constant. On the assumption that the annual changes can be approximated by fitting linear trends to the data for 1961-62 through 1964-65, an alternative set of projections can be made. These are set out in Armitage, Smith and Alper (9, tables 2.11 and 2.12).

29.8. Although it is better to make some allowance for trends than to assume a fixed C-matrix, it is obvious that linear trends cannot continue indefinitely and may indeed become unrealistic fairly rapidly. This question is considered in Armitage, Smith and Alper (9, pp. 56-8). The danger of polynomial trends is noted and the use of the logistic, a simple form of sigmoid curve suggested in Stone (196), is discussed.

29.9. Apart from gradual changes in the transition proportions, there arise from time to time influences which greatly affect a limited number of these proportions. One such influence, a change in administrative regulations, is illustrated in Stone (199, pp. 115-6). A more important one is a change in the school-leaving age and this is discussed in Armitage, Smith and Alper (9, pp. 90-109).

29.10. In Stone (203) results are given of projections using logistic trends, at the same time taking some account of the raising of the school-leaving age. The main difficulty in fitting these trends is a practical one: there is rarely enough data to determine the upper bound and the speed of the adjustment process accurately, so that alternative plausible methods of estimation give widely different results. It was suggested in Stone (203) that, wherever possible, an exogenous estimate of the upper bound should be obtained from educational administrators.

29.11. Although the work of Armitage, Smith and Alper (9) provides the useful examples cited above, it is not exclusively, or even primarily, concerned with projections based on a transition matrix. They emphasize that observed transitions depend on supply as well as demand and will not, unless the supply of places in every kind of educational institution is completely adaptable, reflect the wishes of the learners. This leads them to study bottlenecks in capacity and some of the problems that face the educational planner.

29.12. In Thonstad (215) an analysis is given of the education and manpower system of Norway on lines somewhat similar to those described above. The data used relate to flows between the school years 1961-62 and 1962-63 and are arranged in two transition matrices denoted by Q and R. The Q-matrix contains transition proportions between educational activities and the R-matrix contains transition proportions from educational activities to various types of final or completed education. If we write table 7.1 above in the partitioned form

$$\left[\begin{array}{c:c:c:c} 0 & \mathbf{d}'_1 & \mathbf{d}'_2 & \\ \hdashline \mathbf{b}_1 & S_{11} & 0 & \Delta\mathbf{n}_1 \\ \hdashline \mathbf{b}_2 & S_{21} & S_{22} & \Delta\mathbf{n}_2 \\ \hdashline & \mathbf{n}'_1 & \mathbf{n}'_2 & \end{array}\right]$$

and derive $C_{11} = S_{11}\,\hat{\mathbf{n}}_1^{-1}$, $C_{21} = S_{21}\,\hat{\mathbf{n}}_1^{-1}$ and $\mathbf{c}'_1 = \mathbf{d}'_1\,\hat{\mathbf{n}}_1^{-1}$, then $Q = C'_{11} = \hat{\mathbf{n}}_1^{-1}\,S'_{11}$ and $R = [C'_{21} \vdots \mathbf{c}_1] = \hat{\mathbf{n}}_1^{-1}\,[S'_{21} \vdots \mathbf{d}_1]$. In this study Q is of order 60 and R is of type 60×18.

Table 29.1. Stock-flow matrix for 1961-62 in respect of males in England and Wales who have already entered primary school

(Thousands)

State at new year 1962			Outside world	Pupils and students							Teachers						Others			Total
		State at new year 1961	0	1	2	3	4	5	6	7	8	9	10	11	12	13	14	15	16	
0		Outside world									0.2	0.3	0.2	0.2		0.1	1.2	5.6	102.7	
1	Pupils and students	Primary	342.6	1973.5																2316.1
2		Secondary n.e.s.		244.3	884.3															1128.6
3		Secondary grammar		84.1		410.6														494.7
4		Further ed. n.e.s.			8.2	5.5	28.4												8.3	50.4
5		Further ed. advanced			3.3	2.2	1.8	12.5												19.8
6		Teacher training			0.4	2.3		0.1	5.1	2.0								0.4	2.3	12.5
7		University and C.A.T.			0.6	16.0				52.3									7.2	76.1
8	Teachers	Primary							1.5		37.2						0.2			38.8
9		Secondary n.e.s.							3.6	0.3		57.4						0.3		61.6
10		Secondary grammar							1.6	0.5			28.2					0.5		30.9
11		Further education								0.2		0.5	0.2	17.5			0.5	0.6	1.5	21.0
12		Teacher training									0.1	0.1	0.1		1.3		0.1			1.6
13		University and C.A.T.								0.6						8.8	0.1	0.2		9.8
14	Others	Ex-teachers									0.9	1.1	1.0	1.1	0.1	0.3	22.0			26.5
15		Graduate non-teachers						2.2	0.1	14.6								287.5		304.3
16		Others		16.0	233.8	48.8	26.6	1.1	0.2	2.4									17398.4	17727.3
		Total		2318.0	1130.5	485.4	56.7	15.9	12.0	72.9	38.3	59.5	29.7	18.9	1.4	9.2	24.0	295.1	17520.4	

Note: Components do not always add up to totals because of rounding-off errors.

29.13. A feature of this study is that the solution of a number of problems connected with the structure of the system and the progression of pupils and students is shown to depend on R, powers of Q and the inverse $(I-Q)^{-1}$. For instance, the proportion of pupils in educational activity j who will sooner or later graduate with completed education r is given by the element in row j and column r of $(I-Q)^{-1}R$. An aggregated selection from this matrix, which is of type 60×18, taken from Thonstad (215, table 2.3.10) is set out in table 29.2 below.

29.14. In table 29.2, closed universities are those which have for some time been operating a rather

Table 29.2. Percentage distribution of pupils and students in selected educational activities by groups of completed educations

(Based on transition proportions for Norway in 1961-62 to 1962-63)

Completed education \ Educational activity	1st grade of secondary school	3rd grade of secondary school	3rd grade of gymnas	1st year of closed universities	1st year of open universities
Lower general education	45.4	25.4	0.1		
Gymnas	2.3	3.8	12.2	3.5	11.0
Teacher training	4.5	7.1	17.0		1.7
Vocational training	39.8	50.7	31.8		2.0
Lower university degree (Norwegian)	1.7	2.8	8.5	0.6	32.8
Higher university degree (Norwegian)	4.8	7.9	24.2	95.3	51.9
University degree (foreign)	1.2	2.0	5.9		

Note: Apart from rounding-off errors, the column sums are less than 100 because of youthful deaths.

strict admissions policy whereas open universities are those which admit anyone who has passed the final examination of the gymna (upper stage of secondary school).

29.15. A model designed to project enrolments in the graduations from the Norwegian system of higher education and projections to 1985 are given in Birkeland (27, 28).

29.16. In Stone (199) some results were published from a study of the flows of males in each of the first twenty years of life into, through and out of the system of full-time formal education of England and Wales in 1964-65. In this case the primary criterion of classification is age (year of birth), the second is kind of educational establishment attended and the third is level of study (which applies only to secondary schools); and these combine to give a flow-matrix of order 114. Although the conceptual framework and the notation differ a little from those adopted in this report, the matrices here denoted by S, C and $(I-C)^{-1}$, are given in full. Similar matrices are available for females in 1964-65 and for both sexes in 1965-66. Calculations based on admission proportions are also available and so are calculations restricted to survivors for both the forward and the backward models.

29.17. The matrix multiplier, $(I-C)^{-1}$, is lower-triangular with only zero entries above the leading diagonal because it is impossible to go backwards in age. The numbers in the first column of this matrix show the proportion of children who would be found in each activity in each of the first twenty years of life if their progression were governed by a fixed set of transition probabilities of the magnitude observed in 1964-65. With a little rearrangement and multiplication by 1,000, these numbers can be set out as in table 29.3 below.

29.18. In table 29.3 we start with 1,000 baby boys and 1,000 baby girls and observe how they arrange themselves over educational activities as they grow older. If we add up the numbers by columns we obtain, apart from small rounding-off errors, series which decrease with age as a consequence of the cumulative effect of mortality. If we add up the numbers by rows we obtain the number of boy or girl years spent in each activity in the first 20 years of life by the initial 1,000 boys or girls; and so if we divide these numbers by 1,000 we obtain the time spent on average in each activity by one child. Thus boys spend 8.0 years in the first 20 outside the system of full-time formal education, of which 4.6 are before they enter the system and 3.4 are after they leave it. For girls the corresponding figures are 8.1, 4.7 and 3.5. Of the years spent inside the system, boys spend, on average, 11.2 years at school and 0.3 years in some form of full-time further education; and the corresponding figures for girls are 11.4 and 0.1. Of course, while school careers are completed by age 19, many careers in full-time further education are not.

29.19. Another example based on the forward model, but this time on the version of it which is restricted to survivors, is set out in table 29.4 below. This table provides an answer to the following question: how is time likely to be distributed over activities in the five years from age 15 through age 19 for the groups of individuals now in various initial states?

29.20. The matrix inverse from which table 29.4 was constructed is a little different from the C-matrix which we have encountered so far. Let us denote the transition matrix restricted to survivors by D where

$$D = S(\hat{\mathbf{n}} - \hat{\mathbf{d}})^{-1} \qquad \text{(XXIX.1)}$$

on rearranging (XXIX.I) and post-multiplying by $\hat{\mathbf{n}}^{-1}$, we obtain

$$D(I - \hat{\mathbf{d}}\hat{\mathbf{n}}^{-1}) = \hat{\mathbf{S}}\hat{\mathbf{n}}^{-1} = C \qquad \text{(XXIX.2)}$$

whence, if it exists,

$$(I-D)^{-1} = [I - C(I - \hat{\mathbf{d}}\hat{\mathbf{n}}^{-1})^{-1}]^{-1} \qquad \text{(XXIX.3)}$$

Table 29.3. Educational progression of 1,000 baby boys (upper rows) and 1,000 baby girls (lower rows)

(Based on transition proportions for England and Wales in 1964-65)

Activity \ Age	0	1	2	3	4	5	6	7	8	9	10	11	12	13	14	15	16	17	18	19	Total
0 Not in full-time formal education	1,000	980	974	946	702	21	9	7	4						2	323	631	754	821	850	8,024
	1,000	984	979	952	708	20	9	9	8							325	639	773	851	874	8,131
1 Nursery and primary schools			3	29	272	951	961	960	960	957	952	309	25	9							6,388
			2	29	271	958	967	966	964	963	959	288	2								6,369
2 Secondary schools: up to O-level																					
a. Secondary modern												367	524	513	504	242	45	5			2,200
												362	514	504	496	233	40	4			2,153
b. Grammar										1	4	144	208	226	234	208	86	11	1		1,123
										1	4	175	247	250	250	236	93	10	1		1,267
c. Comprehensive												70	116	134	151	105	35	6	1		618
												69	116	135	152	108	37	5	1		623
d. Other normal												66	81	72	63	38	12	2			334
												68	82	73	63	38	12	2			833
3 Secondary schools: A-level																					
a. Secondary modern																	2	2	1		5
																	2	2			4
b. Grammar																21	103	130	55	6	315
																5	83	107	35	2	232
c. Comprehensive																	13	20	11	2	46
																	12	17	6	1	36
d. Other normal																	4	5	2		11
																	2	3	1		6
4 Special schools			1	1	1	3	4	7	10	15	17	17	18	18	18	15	4				149
					1	2	3	4	7	15	15	15	16	16	16	13	4				127
5 Further education n.e.s.																18	36	35	36	30	155
																19	53	48	32	19	171
6 Colleges of education																			6	13	19
																		4	28	48	80
7 Universities																		1	35	65	101
																		1	19	30	50
Total	1,000	980	978	976	975	975	974	974	974	973	973	973	972	972	972	970	971	971	969	966	19,488
	1,000	984	981	981	980	980	979	979	979	979	978	977	977	978	977	977	977	976	974	974	19,587

Table 29.4. Years expected to be spent in various activities from age 15 through age 19 by survivors from four selected initial states

(Based on transition proportions for England and Wales in 1965-66)

State	Age 0		Age 11		Age 13			
	Pre-school		Primary		Secondary Modern		Grammar	
Activity	Males	Females	Males	Females	Males	Females	Males	Females
	1	2	3	4	5	6	7	8
0 Not in full-time formal education	3.414	3.455	3.351	3.456	4.090	4.124	1.775	1.967
2 Secondary schools: up to O-level								
a. Secondary modern	0.270	0.261	0.243	0.248	0.566	0.549	0	0
b. Grammar	0.273	0.319	0.294	0.303	0	0	1.249	1.299
c. Comprehensive	0.216	0.214	0.265	0.262	0.068	0.070	0.037	0.057
d. Other normal	0.096	0.086	0.088	0.074	0.012	0.012	0	0
3 Secondary schools: A-level								
a. Secondary modern	0.006	0.005	0.005	0.005	0.012	0.011	0	0
b. Grammar	0.289	0.228	0.310	0.218	0.004	0	1.311	0.935
c. Comprehensive	0.090	0.076	0.110	0.091	0.036	0.030	0.021	0.026
d. Other normal	0.027	0.013	0.025	0.012	0.007	0.005	0.002	0.001
4 Special schools	0.023	0.011	0.004	0.001	0	0	0	0
5 Further education n.e.s.	0.163	0.175	0.163	0.172	0.173	0.165	0.190	0.271
6 Colleges of education	0.021	0.101	0.023	0.102	0.009	0.029	0.055	0.258
7 Universities	0.110	0.057	0.119	0.055	0.020	0.006	0.360	0.187
Total	5.000	5.000	5.000	5.000	5.000	5.000	5.000	5.000

Note: Components do not always add up to totals because of rounding-off errors.

This inverse will not exist if all the column sums of $(I-D)$ are zero; but they will not be if, as in the present case, age is a criterion of classification. Whereas, with a C-matrix, individuals are dropping out of the system at all ages, with a D-matrix no-one drops out until the final stage is reached and then all drop out. In the present case, D is of order 114; and rows 60 through 114 show the expected time spent, on average, in the various activities during the five years 15 through 19. Table 29.4 is formed by adding up over the five ages the time spent in each activity as shown in the columns relating to the different initial states.

29.21. The first entry in columns 1 and 2 shows that, at birth, children can expect to spend nearly three and a half of the five years outside the system of full-time formal education and one and a half years

inside it. The entries contained in rows 2 and 3 relate to average experience and do not, of course, imply that individual children pass through a succession of secondary schools. If we add up all the entries relating to secondary schools in the first two columns, we obtain 1.267 for boys and 1.202 for girls, indicating that at birth the expectation for girls is five per cent less than the expectation for boys. There are minor changes at age 11 but nothing very striking.

29.22. At age 13, separate tabulations are made for children at secondary modern schools and at grammar schools, the former being the least and the latter the most academic type of secondary school. Children who go to secondary modern schools can expect less than one year inside the system of full-time formal education from ages 15 through 19 while those who go to grammar schools can expect over three years. Of this period, the grammar school boys spend 2.620 years at school whereas the girls spend only 2.318 years; so the gap is now 12 per cent. This figure, however, does not fully reflect the disadvantage of girls in the matter of preparing for university entrance since for this purpose success in at least two A-level examinations is needed. The expected time to be spent on average in such work is 1.334 years for boys and 0.962 for girls, indicating a gap of 28 per cent. This gap is associated with, but does not altogether account for, the sex differential in the expectation of university entrance apparent in row 7 and columns 7 and 8 of the table.

29.23. A final example, based this time on the version of the backward model which is restricted to survivors, is set out in table 29.5 below. This table provides an answer to the question: how much time has been spent on average in different activities over the past five years, that is at ages 15 through 19, by individuals in various final states at age 19?

Table 29.5. Years estimated to have been spent in various activities from age 15 through age 19 by those in four final states at age 19

(Based on admission proportions for England and Wales in 1965-66)

Activity \ State	Age 19							
	Not in full-time formal education		Further education n.e.s.		Colleges of education		Universities	
	Males	Females	Males	Females	Males	Females	Males	Females
	1	2	3	4	5	6	7	8
0 Not in full-time formal education	3.944	3.981	1.523	1.545	0.835	0.597	0.464	0.347
2 Secondary schools: up to O-level								
a. Secondary modern	0.339	0.324	0.279	0.232	0.188	0.127	0.084	0.051
b. Grammar	0.222	0.246	0.578	0.679	0.751	0.911	0.959	1.134
c. Comprehensive	0.071	0.070	0.068	0.063	0.059	0.066	0.052	0.040
d. Other normal	0.099	0.099	0.104	0.122	0.115	0.110	0.075	0.048
3 Secondary schools: A-level								
a. Secondary modern	0.003	0.001	0.004	0.001	0.075	0.040	0.003	0.001
b. Grammar	0.137	0.084	0.803	0.781	1.329	1.302	1.667	1.645
c. Comprehensive	0.007	0.005	0.055	0.036	0.073	0.095	0.073	0.053
d. Other normal	0.011	0.004	0.064	0.002	0.143	0.141	0.089	0.056
4 Special schools	0.018	0.013	0.010	0.007	0.005	0.003	0.003	0.001
5 Further education n.e.s.	0.146	0.174	1.508	1.534	0.030	0.027	0.017	0.016
6 Colleges of education	0	0.001	0	0	1.395	1.579	0	0
7 Universities	0.002	0.001	0	0	0	0	1.514	1.606
Total	5.000	5.000	5.000	5.000	5.000	5.000	5.000	5.000

Note: Components do not always add up to totals because of rounding-off errors.

29.24. The extremes illustrated in table 29.5 are those not in full-time formal education at age 19 (columns 1 and 2) and those at university at that age (columns 7 and 8). As we should expect, their educational history from the school-leaving age onwards is very different and a numerical measure of this is provided in the table.

29.25. If we compare tables 29.4 and 29.5 we can see that those at secondary modern schools at age 13 could expect to be in the educational system for a shorter time than those who were outside it at age 19, since some of the latter group will have had a slightly more extended education. On the other hand, those at university at age 19 spent less time out of the system than could be expected by the average grammar school child at age 13, since those who enter university are only a proportion of those who have had an extended education at school.

29.26. The figures in tables 29.4 and 29.5 are hypothetical in the sense that they relate to people who live their lives under the conditions of 1965-66.

29.27. In the last three examples age is the primary criterion of classification and this has the disadvantage that, with existing statistics, it is difficult to carry the story beyond age 19 and impossible to introduce certain classifications which could readily be introduced if the criterion of age were not insisted on. However, in Stone (201) a matrix is presented for the whole active sequence, essentially an expanded version of table 3.4 in chapter III above, in respect of the male population of England and Wales in 1965-66. The S-matrix in this paper is of order 22 and is derived by aggrega-

tion from a still larger one of order 43 which has not been published. One of the features introduced into this matrix was to separate out the last year at secondary school and to classify leavers by their leaving qualifications. This makes it possible to work out the effect of different qualifications on future educational expectations.

29.28. Once we abandon age as a criterion of classification we run into a difficulty: the elements in a column of the flow matrix do not all come from the same vintage or set of closely adjacent vintages. This can be seen clearly if we consider a column relating to employment. Assuming a working life of 50 years and an age at entry of 15 years, the individuals in this column of a matrix for 1965 must have been born between 1900 and 1950. But whereas the majority of those who retired or died were born in the earlier part of the period, those who returned to the educational system were born in the later part and those who remained in employment were born at various times throughout the period. The vintage size is therefore different for different elements of the column and the same is true, to a greater or lesser extent, of the elements in other columns. The means used to overcome these difficulties and to form an adjusted flow matrix are explained in Stone (201).

29.29. To the extent that the adjustments succeed in producing a flow-matrix similar to what would have been observed if the population had been in a state of stationary equilibrium, the elements in the inverse $(I-C)^{-1}$ can be given the following interpretations. First, the diagonal elements measure the mean time spent in a state by someone who is just entering it. Second, the off-diagonal elements measure the mean time spent in the state specified in the row multiplied by the probability of reaching it from the state specified in the column. Third, if we add up the entries in a column we obtain the expectation of life of an individual entering the state to which the column relates; and this time is divided into the mean time spent in each future state. Finally, with the help of a life table we can find out the age at which the sum of the entries in a column is the expectation of life. This age is the average age at which the state specified in the column is entered.

29.30. Table 29.6 below gives some estimates of the expectation of life at birth derived from the flow table in Stone (201).

Table 29.6. Alternative estimates in years of the expectation of life at birth and its main components

England and Wales, males, 1965-66

	Individual ages	All-age		
		Fully adjusted	Partially adjusted	Unadjusted
Pre-school	4.6	5.1	4.5	4.7
School	11.3	12.4	11.4	11.9
Further education	...	0.7	1.0	1.1
Economic activity	...	44.5	47.2	56.6
Home and retirement	...	6.6	6.8	7.9
Total	68.5	69.2	71.0	82.3

Note: Components do not always add up to totals because of rounding-off errors.

29.31. The first column in table 29.6, which is given for purposes of comparison, shows in the final row the official estimate of the expectation of life at birth in 1964-66 taken from the United Kingdom General Register Office (234). The mean times spent in pre-school and school activities in this column are taken from a 1965-66 table corresponding to table 29.3 above. The three columns relating to the all-age matrix show the results from the fully adjusted, partially adjusted and unadjusted versions. A comparison of the totals in the first and last columns brings out the importance of adjusting the entries in the *S*-matrix for vintage size. Compared with the unadjusted column, the partially adjusted column is a great improvement and the elements relating to pre-school and school are virtually correct. The fully-adjusted column, which was obtained by applying a mechanical adjustment procedure to ensure the equality of the row and column totals of the *S*-matrix, shows a further improvement in the total but some distortion in the components.

29.32. In de Bruyn (50) a scheme is proposed for collecting data on stocks and flows of pupils and students from educational estabishments largely by means of including in the annual return to be completed by such establishments a question relating to the position of each pupil or student twelve months earlier. A number of tabulations for 1967 based on this scheme were published in the Netherlands (145). An example of the simplest form of tabulation based on this scheme is set out in table 29.7 below.

29.33. In table 29.7 the educational classification follows the main lines of ISCED. The Netherlands (145) also provides information which would enable types of education and qualifications to be incorporated in the table. Provision is made in the underlying questionnaire for collecting information on year of birth.

29.34. The example just given provides a good illustration of the power of systematized administrative records as a source of information. A great deal of

Table 29.7. Matrix of full-time education by level for males (upper rows) and females (lower rows) Netherlands, 1966-67

(Thousands)

State at the opening of the academic year 1967-68			State at the opening of the academic year 1966-67: In full-time education 1	2	3	4	5	6	Not in full-time education 7	8	9	Total
1	In full-time education	Preceding the first level	122.3 118.0								123.7 117.2	246.0 235.3
2		First level	116.1 111.2	649.2 602.7							9.0 7.4	774.3 721.2
3		Second level: lower stage		109.7 105.6	298.4 230.3	0.3 0.1				0.1	1.4 1.0	409.9 337.0
4		Second level: higher stage		 0.1	30.5 33.9	48.4 35.9	0.2			0.2	0.4 0.6	79.7 70.5
5		Third level: non-university			6.3 2.7	3.5 3.5	26.2 15.3	0.1			0.5 0.3	36.7 21.8
6		Third level: university				9.6 2.3	0.4 0.1	52.5 11.7			1.0 0.3	63.5 14.4
7	Not in full-time education	Apprenticeship scheme		0.4 0.5	24.5 2.5							
8		Part-time education		0.8 0.2	18.4 3.5	2.6 3.1	0.9 0.1					
9		No education	0.8 0.7	8.5 6.0	19.9 56.0	8.8 20.4	7.0 5.4	5.7 1.3				
		Total	239.2 229.9	768.6 715.0	398.0 328.9	73.1 65.2	34.8 20.9	58.2 13.0				

Notes: Deaths and emigrants are included in row 9; components do not always add up to totals because of rounding-off errors.

specifically educational data can be collected in this way with comparative ease and with complete coverage. But, as was pointed out in section B.2 of chapter IV above, it is not easy to collect in this way information on the family background and other non-educational characteristics of pupils and students. One method would be to use the records of educational establishments as a sampling frame and then approach a sample of families for this kind of information.

29.35. An example of the use of survey methods to collect information about pupils and students is provided by the work of Freytag and Weizsäcker (74, 75) on the school system of Baden-Württemberg. In this case it was possible to supplement purely educational information with data on family background, religion and so on. As a consequence, the flow matrix can be disaggregated by these characteristics, and separate groups in society can be studied separately.

29.36. In Freytag and Weizsäcker (74, volume of tables, pp. 1-20) an illustration is provided of a highly convenient method of presenting the entries in large, sparse matrices. This consists in a systematic tabular characterization of all the non-zero entries, that is to say, in the present instance, the position of each flow, the size of each flow, the size of the associated stock and the ratios of flows to stocks, that is the transition proportions.

29.37. In the branches of educational systems in which attendance is not compulsory there is a problem of wastage: learners drop out before completing the work of that branch. A means of analysing this situation has been developed by UNESCO. This is described by UNESCO (267) taking Colombia as an example but also providing studies of the position in Dahomey, India and Morocco.

C. Influences on educational achievement

29.38. The examples in the preceding section were mainly concerned with flows through educational systems, only passing reference being made to the factors influencing these flows. In this section some examples will be given of attempts either to link later performance with earlier intentions or to analyse educational progression in terms of personal and social as well as educational variables.

29.39. The first example is provided in Armitage, Phillips and Davies (8). Here data, based on the work of Douglas, Ross and Simpson (55), are presented which bear on intentions and performance in O- and A-level examinations (taken respectively at the conclusion of the lower and higher stages of secondary school). Intentions, which are inferred from the subjects attempted in the examinations, and performances, which are known, are combined into groups indicative of the options which will be open if the intentions are realized. There are three links in this chain: from O-level intentions to O-level performance; from O-level performance to A-level intentions; and from A-level intentions to A-level performance. There are 12 groups at O-level and 19 at A-level, so that the connecting matrices are of order 12, type 19×12 and order 19 respectively.

29.40. The sample contains 1525 boys, born in March 1946, who appear in each of the matrices. The three separate links are given in Armitage, Phillips and Davies (8). Although the numbers in some of the cells are very small, it is interesting to calculate the consequences of multiplying out the chain. This is an example of the type of analysis set out in equation (VII.19) above with three links instead of two, so that the submatrix in the bottom left-hand corner of $(I-C)^{-1}$ is $C_{43}\ C_{32}\ C_{21}$. Although not presented by the authors, this matrix is set out, with its elements multiplied by 1000, in table 29.8 below.

Table 29.8. Distribution over A-level pass groups of 1,000 boys in different O-level attempt groups England and Wales, 1962-64

A-level pass group		O-level attempt group: 1 Science-Strong arts	2 Science-Social studies-Strong arts	3 Strong arts (Latin)	4 Science-Social studies-Weak arts	5 Social studies-Strong arts	6 Science-Social studies	7 Science-Weak arts	8 Social studies-Weak arts	9 Science	10 Social studies	11 Weak arts (no Latin)	12 No options
Strong arts: a) 3 or more (no classics)	1	49	5	183	3	77	4	4	7	6	8	14	11
b) 1 or more + classics	2	2	4	16	0	2	0	0	0	0	0	0	0
Strong science-Arts: 1 or more of each	3	8	1	0	1	0	1	1	0	2	1	1	1
Strong science: a) 3 or more (no maths)	4	85	44	20	24	28	35	55	4	30	6	8	9
b) 2 or more + 1 maths	5	87	136	7	129	9	78	63	31	55	9	13	8
c) 1 + 2 or more maths	6	116	58	10	51	14	32	90	1	33	2	2	3
d) 2 or more + 2 or more maths	7	22	53	1	28	1	24	30	2	15	2	3	3
Strong social studies: a) 2 or more + 1 or more arts	8	7	5	9	8	25	8	2	17	4	15	6	7
b) 1 + 2 or more arts	9	3	37	25	40	68	16	5	68	8	31	25	9
c) 1 or more + 1 or more science	10	1	13	1	17	4	20	3	6	4	11	4	4
Strong vocational: a) 2 + 1 or more academic	11	11	11	13	17	5	19	1	12	2	7	3	4
b) 1 + 2 or more artistic	12	6	21	4	30	6	4	4	4	6	5	5	6
c) 1 + 2 or more academic	13	0	2	0	3	0	0	0	0	0	0	0	1
Weak arts: 1 or 2, or 1 + 1 science	14	100	53	253	38	131	26	25	79	33	28	53	27
Weak science: 1 or 2 science or maths	15	193	169	82	131	73	122	152	53	119	49	39	40
Weak social studies: 1, or 1 + 1 arts or science	16	20	65	30	82	82	87	18	87	26	91	42	37
Weak vocational: a) 1 or 2	17	25	20	17	12	26	14	13	18	18	19	21	23
b) 1 + 1 academic	18	62	53	32	20	50	20	19	27	24	16	14	14
No A-levels	19	202	250	299	366	400	490	513	582	615	701	746	795

29.41. Apart from rounding-off errors, the elements in each column of table 29.8 sum to 1,000. The groupings in the twelve columns relate to the O-level attempt (initial) stage and the groupings in the nineteen rows relate to the A-level result (final) stage. The numbers in the columns show the probable distribution at the final stage of 1,000 boys who at the initial stage were in the group shown at the head of the column. The numbers in row 19 of the table failed to obtain any A-level certificates; and it can be seen that these numbers vary over a wide range. Boys who start by attempting one of the first three combinations are likely, as might be expected, to perform altogether better at the final stage than do boys who start by attempting one of the last three combinations. The table provides a measure of the extent of this.

29.42. It is unlikely that anyone familiar with the British school system will be greatly surprised by these results; but it is important not to read into them more than they contain. In the first place, they are based on a small sample and so would certainly not have been reproduced exactly if it had been possible to analyse the whole population. In the second place, no underlying reasons are given for the very different outcomes associated with the different initial groups. For instance, the boys who start by attempting only science subjects (apart from English and mathematics which are necessary for all options) appear to do relatively badly. This may be due to the fact that an early concentration on science is not a very good idea in educational terms; or that the curricula and teaching of school science are inferior to the curricula and teaching of school classics and other arts subjects; or that opinions and attitudes, especially among teachers, were such in the early 1960s that boys of above average promise were strongly encouraged not to concentrate on science. In other words the results relate to a particular school system operating in a particular climate of opinion and do not throw light on the inevitable outcome in any circumstances of particular early choices.

29.43. The next two examples in this section, again based on the data collected by Douglas and his colleagues, relate academic achievement to the personal and familial characteristics of individuals as well as to their position in the school system. Both examples are based on multivariate regression methods but of a rather different kind.

29.44. In Orr (158) an attempt is made to relate educational progression to such exogenous variables as sex, measured ability, family size and social class as well as to such purely educational variables as academic type of school, co-educational or single sex type of school, proportion of graduate teachers employed and so on. The method used is a form of multivariate analysis described in Sonquist and Morgan (190). It is a means of accounting for the sum of squares of a set of observations through a series of binary divisions of one of the determining variables into mutually exclusive groups, thereby forming a tree in which at each stage of the branching process the variable chosen and the way in which it is divided accounts for as much as possible of the variation in the preceding branch. For instance, if we start with individual scores in terms of the highest qualification obtained, the method leads us to distinguish first a group of somewhat academic types of school from the rest. At the next stage, if we go along the more academic branch, we are led to distinguish individuals whose

ability is above or below a certain level, and so on. In this way insight is gained into the important influences on educational progression and achievement, and enables the transition proportions to be adjusted for the effect of these influences.

29.45. Much the same problem is studied in Tuck (220) using the technique of regression on dummy variables. The variables considered are academic type of school, measured ability at age eight, social class and sex. Each variable is divided into two categories and so the sample is divided into $2^4 = 16$ groups of children. For each group it is a simple matter to calculate the proportion reaching a given level of educational achievement, such as obtaining at least one O-level certificate. This vector of proportions can be related to a matrix of dummy variables which characterize each group of children. The form of this matrix, X say, is

$$X = \begin{bmatrix} 1 & 0 & 0 & 0 & 0 \\ 1 & 0 & 0 & 0 & 1 \\ 1 & 0 & 0 & 1 & 0 \\ 1 & 0 & 0 & 1 & 1 \\ 1 & 0 & 1 & 0 & 0 \\ 1 & 0 & 1 & 0 & 1 \\ 1 & 0 & 1 & 1 & 0 \\ 1 & 0 & 1 & 1 & 1 \\ 1 & 1 & 0 & 0 & 0 \\ 1 & 1 & 0 & 0 & 1 \\ 1 & 1 & 0 & 1 & 0 \\ 1 & 1 & 0 & 1 & 1 \\ 1 & 1 & 1 & 0 & 0 \\ 1 & 1 & 1 & 0 & 1 \\ 1 & 1 & 1 & 1 & 0 \\ 1 & 1 & 1 & 1 & 1 \end{bmatrix} \qquad \text{(XXIX.4)}$$

29.46. In this matrix a 1 in the first column corresponds to a constant term which is taken as a standard: a boy from the higher social class in the upper ability group attending a school of the more academic type. A 1 in the second column indicates being a girl, a 1 in the third column indicates being in the lower social class and so on. If y denotes the vector of proportions, then we can calculate a vector of effects, $\mathbf{b}^*$ say, from the familiar regression equation $\mathbf{b}^* = (X'X)^{-1}X'\mathbf{y}$. In view of the variation in the size of the different groups, it is desirable to weight these groups, and the results obtained in this way are set out in table 29.9 below in the columns headed "simple model".

29.47. If we look at the first column in the upper panel of this table we can see that most of the variability in the dependent variable is accounted for by the factors considered. For the standard group, 98.0 per cent can be expected to succeed in obtaining at least one O-level certificate. Attendance at the less academic type of school reduces this expectation to 42.0 per cent; inferior ability reduces it to 77.5 per cent; being working rather than middle class reduces it to 84.2 per cent; and being a girl reduces it to 94.8 per cent. If all the adverse elements are present at once the standard of 98.0 per cent is reduced to 4.5 per cent.

29.48. It is assumed in this model that the different influences can be combined additively. Alternative calculations, in which the influences are combined multiplicatively, suggest that the original assumption is to be preferred. However, it must be recognized that the determining variables are correlated, so that the omission of one of them may not lead to much reduction in $\bar{R}^2$. In the present case it is shown in Stone (203) that if the variable relating to type of school attended is omitted the main consequence is to attribute far more importance to social class and ability. These alternative calculations were based on unweighted regressions and so are not fully comparable, but in them $\bar{R}^2$ drops only to 0.98 compared with 0.99 in table 29.9.

29.49. When it comes to A-level results and entrance on degree courses, the simple model underestimates the achievement of middle class children of upper ability at the more academic type of school and of working class children of lower ability at the less academic type of school. An attempt to adjust for this is shown in the columns headed "extended model".

29.50. The lower panel of table 29.9 shows how far the size of different effects varies with the stage reached in the educational progression. The most striking feature of the table is the increasingly adverse position of girls as they pass from the O-level stage to the stage of entrance into a degree course.

29.51. The influence of shortsightedness on educational attainment is discussed by Douglas, Ross and Simpson (54) who, in so doing, provide an example of a link between education and health. The authors show, on the basis of data obtained from their longitudinal study of children born in March 1946, that short-sighted children are hard-working, successful at school and have high ambitions for further education. They attribute this success in part to parental support and encouragement, noting that short-sight is largely genetically determined and that there appears to be a tendency for intermarriage among the short-sighted.

D. Educational output and productivity

29.52. Many of the difficulties of measuring non-market output, discussed in section B of chapter VI above, are illustrated in Woodhall and Blaug (287) and Blaug and Woodhall (31). These two papers are concerned respectively with ouput, input and productivity in British universities and in British secondary schools.

29.53. In their study of universities the authors consider the three years 1938, 1952 and 1962. The basic unit of output is a student completing a course though some allowance is made for students who do not complete. Four measures are constructed: an unweighted index; an index weighted by length of time spent at the university; an index weighted by broad measures of earnings differentials, which give a greater weight to graduates in science and technology; and an index based on the reciprocals of the preceding weights and intended to emphasize the cultural value of arts subjects. It turns out that weighting makes very little difference; the indices only vary between the limits of 2.29 and 2.39 in 1962 compared with 1 in 1938. The authors consider a number of refinements which, however, they have to reject, usually for lack of data.

29.54. The inputs accounted for are teachers' services, other current goods and services and the imputed value of capital services and students' time. The first two of these inputs rose over the period by a very substantially greater amount than did output.

Table 29.9. The influence of school type, measured ability at age eight, social class and sex at three stages in the educational progression

	O-level	A-level		Degree course	
	simple model	simple model	extended model	simple model	extended model
Constant term	0.980 0.018	0.450 0.041	0.476 0.032	0.184 0.038	0.234 0.036
School type	-0.560 0.019	-0.269 0.045	-0.287 0.028	-0.115 0.033	-0.141 0.028
Ability	-0.205 0.019	-0.093 0.039	-0.143 0.027	-0.015 0.024	-0.065 0.027
Social class	-0.138 0.018	-0.071 0.038	-0.124 0.027	-0.027 0.029	-0.064 0.027
Sex	-0.032 0.016	-0.041 0.032	-0.042 0.020	-0.029 0.023	-0.035 0.018
Extra factor	...	...	0.114 0.026	...	0.069 0.027
$\bar{R}^2$	0.992	0.799	0.924	0.553	0.707
As above in proportion to the constant term					
Constant term	1.000	1.000	1.000	1.000	1.000
School type	-0.571	-0.598	-0.603	-0.625	-0.603
Ability	-0.209	-0.207	-0.300	-0.082	-0.278
Social class	-0.141	-0.158	-0.261	-0.147	-0.274
Sex	-0.033	-0.091	-0.088	-0.158	-0.150
Extra factor	...	...	0.239	...	0.295

29.55. The outcome of these calculations is that output per unit of input fell over the period at a rate of 1 per cent a year or a little more: far more resources were used in producing a unit of output at the end of the period than were used for that purpose at the beginning of it. Since it was possible to say very little about the quality of the education received at different dates, it can be argued that at least a part of the growth of input per unit of output reflected a higher quality of the product rather than a lower productivity of the resources employed.

29.56. In their study of productivity in British secondary schools, which covers the period 1950-63, the authors again reach the conclusion of a fall in output per unit of input. But in this case, there is more dispersion among the different indices of output and, in particular, the decline is substantially reduced if account is taken of the number of O- and A-level certificates obtained by leavers. However, even if this relatively favourable index of output is used, the annual rate of decline of productivity is one per cent or more.

E. Cross-country studies and comparisons

29.57. Many attempts have been made to assemble, compare and analyse educational data drawn from a wide range of countries. Three examples are given below.

29.58. In Psacharopoulos (173) estimates of the social and private rates of return to primary, secondary and higher education in the late 1950s and 1960s are assembled as fully as possible for thirty countries. As the author explains the estimates are not altogether comparable, yet he manages to draw from them some tentative conclusions. First, it appears that the returns to investment in education generally exceed those to other forms of investment. Second, the returns to investment in education tend to decline as the educational level rises. And, finally, returns to education tend to be higher in less developed than in more developed countries.

29.59. In Stone (202, 206) a number of cross-country regressions are given connecting educational variables with demographic, economic and social variables. Three examples will be mentioned.

29.60. First, on the evidence of data for 101 countries in the mid-1960s, there appears to be a fairly close association between the illiteracy rate, the rate of population growth and the GNP per head. In the second paper this relationship is expressed as a logistic

surface connecting the logarithms of the variables. The value of R^2 is as high as 0.89 but there remains a considerable dispersion around the curve.

29.61. Second, on the evidence of data for 114 countries in the mid-1960s, there appears to be a log-linear relationship between the percentage of total enrolments at the primary and pre-primary levels and the ratio of the percent illiterate in the population aged 15 and over to the GNP per head. In this case $\bar{R}^2 = 0.63$. Thus, there appears to be a tendency for poor countries with a high illiteracy rate to concentrate on elementary education; but there remains a considerable dispersion around this plausible relationship.

29.62. Finally, on the evidence of data for 104 countries in the mid-1960s there appears to be a log-linear relationship connecting the percentage of the age group enrolled in primary and secondary education with the GNP per head and the per cent of the population living in urban areas. In this case $\bar{R}^2 = 0.66$.

29.63. In Panitchpakdi (159) the results are given of a study of the growth of secondary and tertiary education in Africa, Asia, Latin America and Europe and their constituent countries. The growth in secondary enrolments in, say 1960-65, is related to the growth in primary enrolments in the preceding quinquennium, the rates of growth of the population, the GNP, the number of secondary level teachers and so on. The author refers to the shortcomings of the GNP per head as an indicator of the level and extent of development and introduces social and political indicators into his analysis, referring to the collection of such indicators in Russett and others (181) and the work of Adelman and Morris (3, 4). The results obtained from this large amount of empirical work are, on the whole, consistent and satisfactory.

XXX. EXAMPLES RELATING TO EARNING ACTIVITIES, EMPLOYMENT SERVICES AND THE INACTIVE

A. Introduction

30.1. Of the many topics relevant to this area, examples drawn from five fields will be given in this chapter. Other topics, such as the measurement of labour disputes and their economic effects, will not be illustrated though, in this particular case, a detailed analysis is given in Fisher (68).

30.2. The structure of any national labour force is complex and so are the movements between the many categories needed to describe it and between the labour force itself and various groups outside it. A series of surveys which provide a great deal of information on both stocks and flows is described in section B below.

30.3. An example directed specifically to inter-industry mobility is discussed in section C. This example illustrates the fact that in order to analyse movement it may not be sufficient to collect information simply about movements.

30.4. In analysing unemployment it would be useful to be able to answer such questions as: for how long can an individual who has been on a register of the unemployed for a given time expect to remain on it? This kind of question can be answered by the application of actuarial methods and an example is given in section D.

30.5. Manpower problems can arise at the level of the organization often in a more acute form than they do at the level of the national economy. Some examples of the application to such problems of the methods of analysis suggested in this report are provided in section E.

30.6. In section D of chapter VII above, models were described which are based not on transition proportions but on admission proportions. Such models were regarded there as backward-looking since they are concerned not with where people are likely to go to but with where they are likely to have come from. As has been pointed out, these models can be given a different interpretation if we think of the movement of vacancies rather than of the movement of men. If a vacancy in an organization is filled by the promotion of a member of that organization, another vacancy will be created and so on until someone is brought in from outside. An example of this interpretation is given in section F.

B. Structure and change in a labour force

30.7. The statistical treatment of these problems is best exemplified by the Japanese employment status surveys which are published in Japan by the Bureau of Statistics (115). These surveys have been conducted every three years since 1955-56 so that the sixth survey relates to 1970-71. The samples are very large, the sixth survey covered about 310,000 households, and they contain retrospective questions relating to the position of the respondent a year earlier. Before going into details it may be useful to see the kind of information they contain. A highly aggregated version of one of many tabulations is set out in table 30.1 below.

30.8. In this table the sample numbers have been magnified so as to refer to the whole population over the age of 14. It relates to people alive at mid-1971 and their position at mid-1970. It is restricted, therefore, to survivors and so the coefficient matrix derivable from it is a *D*-matrix rather than a *C*-matrix. It might be possible to allow for entrants and leavers in the course of 1970-71 but this information is not provided by the survey.

30.9. The surveys divide the population over the age of 14 between those who have a job and those who have not; and they divide the latter group between those engaged in home duties, those being educated and others. This last category includes retired individuals, individuals incapable of working and individuals who are out of employment as opposed to individuals who have a job but, for one reason or another, happened not to be working at the time of the survey.

30.10. In table 30.1 the labour force is classified in a very simple way first by industry and then by employment status. However, without departing from the table from which these figures were taken it would have been possible to obtain a classification by sex, a finer classification of non-agricultural industries and, within manufacturing, a classification by size of enterprise.

30.11. The survey as a whole goes far beyond the kind of classifications exemplified in table 30.1. For instance, it contains information on age, marital status, migration, education, occupation, income, desire for work and multiple jobs.

C. Industrial mobility

30.12. The United Kingdom Department of Employment (229, April 1970) gives tables showing the movements, in Great Britain from June 1967 to June 1968, of males and of females between the twenty-four orders of the standard industrial classification. These data, which are based on a one per cent sample of national insurance cards, can be supplemented by estimates of the number of employees in each order at the beginning and end of the period. If all this material is put into the standard framework, it can be seen that three vectors are missing: (i) entrants in the period; (ii) leavers in the period; and (iii) stayers in the period. If one of these vectors could be estimated, the other two could be deduced though they would, of course, reflect the sampling and other errors in the direct estimates. It does not appear to be possible to obtain this information from the basic data. It would be difficult to obtain it from other sources since this would require estimates of all entrants into and leavers from the labour force classified by industrial orders.

Table 30.1. Persons over the age of 14 with and without a job: Japan 1970-71

(Thousands)

State at mid-1970 / State at mid-1971			Persons with a job								Unclassifiable	Persons without a job			Totals
			Agriculture and forestry				Non-agricultural industries								
			Self-employed	Family workers	Employees	Not reported	Self-employed	Family workers	Employees	Not reported		Home duties	At school	Other	
			1	2	3	4	5	6	7	8	9	10	11	12	
Persons with a job	Agriculture and forestry	Self-employed 1	3762	0	0	0	1	0	17	0	0	3	1	5	3790
		Family workers 2	0	4134	1	0	1	1	25	0	0	7	28	6	4202
		Employees 3	1	1	273	0	0	1	6	0	0	3	2	3	288
		Not reported 4	0	0	0	1	0	0	0	0	0	0	0	0	1
	Non-agricultural industries	Self-employed 5	2	2	1	0	5852	6	124	0	0	107	15	26	6108
		Family workers 6	0	1	0	0	3	2740	47	0	0	42	31	9	2874
		Employees 7	21	29	10	0	62	43	31341	1	1	418	1228	207	33360
		Not reported 8	0	0	0	0	0	0	0	2	0	0	0	0	3
	Unclassifiable 9		0	0	0	0	0	0	1	0	4	0	0	0	5
Persons without a job	Home duties 10		12	50	4	0	157	67	932	1	1	14594	144	347	16308
	At school 11		0	0	0	0	3	1	52	0	0	60	6842	36	6994
	Other 12		32	51	7	0	58	21	457	1	0	283	146	4431	5487
Totals			3830	4267	295	1	6108	2879	33002	6	6	15518	8438	5069	79419

Note: Components do not always add up to totals because of rounding-off errors.

D. Stationary registers of the unemployed

30.13. The information contained in unemployment registers, though it throws a good deal of light on the duration of unemployment, has serious limitations. These can to a large extent be removed by using the registers to construct a life table with departure from the register in place of death and remaining on the register in place of survival. If the distributions of duration of unemployment shown in a sequence of registers are reasonably stable, the information in the registers can be pooled to provide the data needed to construct a stationary register which has all the formal properties of a life table. The methods of doing this are set out in Fowler (72) and a stationary register is given based on British experience over the period 1961-65.

30.14. The starting point in this example is an average of the cumulative distributions of duration on the register of the wholly unemployed (excluding casuals) in Great Britain for eight dates separated by six-monthly intervals from the end of 1961 to mid-1965. The next step is to graduate this cumulative distribution and then calculate the derivative of the function for each duration, expressed in weeks from 0 to 52. It was found that for durations above eight or nine weeks the cumulative distribution is well approximated by a log-normal integral; and that for shorter durations the curve can be approximated parabolically. From this basis it is possible to calculate the usual magnitudes found in a life table.

30.15. The main results of this analysis are summarized below in terms of the magnitude which corresponds to the expectation of life: the additional number of weeks which an individual can expect to spend on the register if he has already been on it for a given number of weeks. An analysis by sex and age is set out in table 30.2. It can be seen from this that a male on entering the register can expect to spend 7.8 weeks on it before he gets off; whereas if he has already spent five weeks on it this period is lengthened to 17.1 weeks. The corresponding figures for females are 6.2 and 13.5. For each sex, as is well-known, the duration is greatly affected by age. In the case of people under the age of twenty-five, the expectation on entry is 4.0 for males and 4.4 for females; whereas in the age-group before the normal retirement age the corresponding expectation is 23.9 for males and 16.0 for females.

30.16. A feature of this kind of life table, at least in the case of the present example which goes up to fifty-two weeks on the register, is that almost without exception the expectation rises with the length of time already spent on the register. This means that the longer the time that an individual has already spent on the register the longer is the time that he can expect to remain there in the future.

30.17. Expectations of this kind depend to some extent on the average rate of unemployment during the period of observation and it is to be expected that they will vary to some extent from one region to another. An analysis bearing on these points is set out in table 30.3 below.

30.18. Table 30.3 brings out the fact that both these influences are important though there is a considerable similarity among the different columns. The unemployment rates at the head of the first eleven columns are the average rates during the period of observation; and the rate at the head of the twelfth column is a hypothetical rate. Although the numbers in column 12 are uniformly higher than those in column 11, the differences are perhaps less than might have been expected.

Table 30.2. Additional number of weeks expected to be spent on the register of the wholly unemployed analysed by sex and age according to the experience in Great Britain, 1961-65

(Age in years; duration in weeks)

Duration on the register	Males			Females		
	<25	55-65	All ages	<25	55-60	All ages
	1	2	3	4	5	6
0	4.0	23.9	7.8	4.4	16.0	6.2
1	4.3	23.5	8.8	4.8	16.8	7.2
2	5.2	23.9	10.6	6.0	18.3	9.2
3	6.5	29.0	13.3	7.8	21.8	11.5
4	..	..	15.8	..	..	12.8
5	..	..	17.1	..	..	13.5
13-25	..	..	26.2	..	..	17.9
26-38	..	..	40.3	..	..	26.9
39-51	..	..	52.8	..	..	35.0
52+	..	..	64.4	..	..	42.4

Table 30.3. Additional number of weeks expected to be spent on the register of the wholly unemployed analysed by region and rate of unemployment according to the experience of Great Britain, 1961-65

(Duration in weeks)

Duration on the register	Percentage of the labour force wholly unemployed											
	1.1	1.2	1.7	1.1	1.1	1.3	2.0	3.3	2.8	3.4	1.7	2.5
	London and South East	Eastern and Southern	South Western	West Midland	East Midland	Yorkshire and Humberside	North Western	Northern	Wales	Scotland	Great Britain	
	1	2	3	4	5	6	7	8	9	10	11	12
0	5.0	6.1	8.5	6.1	8.0	6.5	7.9	11.2	8.6	9.3	7.0	8.2
1	5.7	6.8	8.9	7.1	9.0	7.4	8.9	12.1	9.7	10.9	8.4	9.9
2	7.4	7.9	10.3	9.0	10.9	9.4	10.5	13.9	11.9	12.6	10.3	11.7
3	9.7	11.0	13.9	11.6	13.3	12.2	12.8	16.3	15.3	14.5	12.8	14.3
4	10.4	12.9	16.4	13.5	14.8	13.8	15.2	18.3	17.9	17.3	15.0	16.7
5	11.6	14.2	16.3	13.9	15.5	15.7	17.4	21.4	18.2	18.8	16.1	..
13-25	20.3	23.1	24.2	21.6	26.4	23.5	23.4	26.6	26.4	26.2	24.1	25.3
26-38	32.3	36.4	36.9	33.4	41.2	36.8	35.3	39.3	40.0	39.2	37.0	38.2
39-51	43.0	48.3	48.2	43.8	54.1	48.5	46.0	50.6	51.9	50.8	48.5	50.6
52+	53.0	59.3	58.7	53.5	66.2	59.4	55.8	61.0	63.1	61.5	59.1	60.3

30.19. Regional differences for constant unemployment rates can be seen at their greatest by comparing columns 1 and 5. Although London and the South East had the same unemployment rate as the East Midlands, it had uniformly lower expectations.

30.20. While, as we have seen, much can be done in this context by the analysis of statistics of stocks, the study brings out the desirability of collecting regular statistics of flows into and out of the register. As the author says, such information would throw more light on the very large short-period turnover element in the wholly unemployed register and would make it easier to distinguish the different groups of persons on the register and to develop policies appropriate to them.

E. Manpower in organizations

30.21. Markov methods can be applied to the movement of manpower through organizations and many of the problems that arise and the findings that have been made are described in Bartholomew (16). In this section two examples will be given.

30.22. In Mahoney and Milkovich (136) an analysis is made of the managerial-technical-professional work force of a very large, rapidly growing and regionally dispersed insurance company over the period 1958-68. Detailed records were available so that it was possible to construct annual transition matrices for twenty-three job states. In defining these states

three criteria were used: (*a*) similarity in the skill required and the function performed; (*b*) responsibility level within the skill-function groupings; and (*c*) organizational separation, reflecting the fact that the firm was organized in three subsidiary companies betweeen which it was believed that there was relatively litttle flow of manpower. Provision was also made for entrants and leavers.

30.23. Three kinds of transition matrix were constructed: a single-year matrix based on the data for 1958-59; a single-year matrix obtained by pooling the data for each of the ten years; and a ten-year matrix reflecting the changes that took place between the beginning and end of the decade.

30.24. The authors did not expect to find that the annual transition matrix was constant, and in this they proved right; but the magnitude of the inconstancy turned out to be less than might have been expected.

30.25. The single-year transition matrices when raised to the tenth power did not provide a very good approximation to the ten-year transition matrix though, naturally enough, the pooled matrix performed better than the initial-year matrix. An important source of error in these calculations was the tendency of the single-year matrices greatly to overestimate the number of leavers over the ten-year period.

30.26. Short-term, one year forecasts were found to be reasonably accurate but, in the opinion of the authors, the most useful feature of this kind of model at the present time is that it provides some insight into the structure and possible variation in an organization's work force.

30.27. In terms of improving models of change in the field of manpower studies, there seem to be two clear advantages in studying the individual large organization: the basic data are likely to be relatively complete and accurate; and the policies that are followed are known even if their more remote consequences are not well understood. As a consequence of these two factors there are possibilities of testing alternative criteria of classification and developments of the basic model which are more difficult to carry out at the industry or national levels. For instance, it might be found that errors could be traced to one or a few features of the classification system proposed initially and it would be possible to investigate the influence of length of service on the transition probabilities since this variable is generally considered to be important.

30.28. The second example, set out in Forbes (71), is concerned not with a commercial organization but with a branch of the British naval services, specifically the subsystem relating to officers of the Women's Royal Naval Service (WRNS/O).

30.29. This system is a small and comparatively simple one. It is characterized by four hierarchical states. Recruits enter at state 1 and in states 1, 2 and 3 there are three possibilities: to remain in the same state; to be promoted to the next highest state; or to leave the system. In the case of state 4 there are only two possibilities since there is no higher state into which to be promoted.

30.30. The stock-flow matrix of this system in 1961 is set out in standard form in table 30.4 below.

Table 30.4. The stock-flow matrix for the WRNS/O system in 1961

(*Number of persons*)

State at end-1960 / State at end-1961		Outside world	WRNS/O system 1	2	3	4	Totals (closing stock)
Outside world		1	15	13	3	1	
WRNS/O system	1	41	85				126
	2		14	63			77
	3			4	23		27
	4				0	11	11
Totals (opening stock)			114	80	26	12	

A table similar to table 30.4 can be constructed for each year from 1960 through 1967. A special feature of 1961 is worth noting: the zero as opposed to a blank at the intersection of row 4 and column 3. The zero indicates that a flow is possible but did not in fact take place in the year to which the table relates. Consequently, there are purposes for which table 30.4 is clearly unsuitable since, if fixed transition probabilities are derived from it and these are used to make projections, state 4 will eventually become empty since no promotions will ever be made into it.

30.31. There are detailed rules governing recruitment, promotion and retirement which are related to age, seniority and length of service and these constraints might invalidate the Markov assumptions.

30.32. The author is largely concerned with putting the simple model based on transition probabilities through a systematic series of tests to see how far the assumptions are valid in this instance and how far the model is useable for the purpose of prediction. He concludes that there appears to be some non-homogeneity of classes and some non-independence of flows but that on the whole the model fits fairly well.

30.33. Since the system is a simple one and since over the period considered it was fairly stable and indeed almost stationary, it can be used to illustrate a number of analytical possibilities. For instance the author shows that the pooled *C*-matrix based on the period 1960-67 takes the form

$$C = \begin{bmatrix} 0.729 & 0 & 0 & 0 \\ 0.101 & 0.830 & 0 & 0 \\ 0 & 0.046 & 0.867 & 0 \\ 0 & 0 & 0.033 & 0.902 \end{bmatrix} \quad \text{(XXX.1)}$$

If from (XXX.1) we form $(I-C)^{-1}$ we obtain, approximately,

$$(I-C)^{-1} = \begin{bmatrix} 3.690 & 0 & 0 & 0 \\ 2.171 & 5.882 & 0 & 0 \\ 0.751 & 2.035 & 7.519 & 0 \\ 0.251 & 0.682 & 2.532 & 10.204 \end{bmatrix} \quad \text{(XXX.2)}$$

30.34. The numbers in the columns of (XXX.2) measure in years the time that an individual entering the state to which the column refers can expect to spend in each state. The column sums

$$\mathbf{i}'(I-C)^{-1} = \begin{bmatrix} 6.863 & 8.599 & 10.051 & 10.204 \end{bmatrix} \quad \text{(XXX.3)}$$

measure the time that an entrant into one of the states is likely to remain with the organization in the future.

It seems fairly typical of this type of matrix that the numbers tend to rise from the initial to the final state, indicating that the longer an individual has been with an organization the longer he is likely to remain with it.

30.35. The diagonal elements of (XXX.2) measure the mean staying times in the different states by all who enter them, whether they leave the system from that state or remain, on promotion, in the system. The sum of these elements is a little over 27 years and provides some indication of the average length of a completed career in the system. It will be an underestimate if those who leave the system from a state spend, on average, less time in that state than those who leave it through promotion. In view of these considerations, it is interesting that the system can be entered between the ages of 21 and 29 and that the latest age for retirement is 55.

30.36. If we divide the elements in a row by the diagonal element of that row we obtain the probabilities of reaching that state from other states. If we denote this matrix by P then, in the present case,

$$P = \begin{bmatrix} 1.00 & & & \\ 0.37 & 1.00 & & \\ 0.10 & 0.27 & 1.00 & \\ 0.02 & 0.07 & 0.25 & 1.00 \end{bmatrix} \qquad \text{(XXX.4)}$$

The numbers below the diagonal in the columns of (XXX.4) are probabilities of promotion. Thus a new entrant to state 1 has a 2 per cent chance of eventually entering state 4; and this chance rises to 7 per cent on promotion to state 2 and to 25 per cent on promotion to state 3.

F. Vacancies and movements of manpower

30.37. In the preceding section the models of movement through an organization were based on transition probabilities, that is on the probable movement of individuals from the state they are in to the states into which they are able to move. It is implicitly assumed in this model not only that it is possible to move in accordance with the estimated transition probabilities but also that movements actually take place in this way. However, while this may be possible on average, it may not be possible in a particular year because there may not be the vacancies needed to accommodate the movements implied by the transition probabilities: for instance, it is impossible to appoint more new bishops in a year than there are vacant bishoprics in that year. The tendency of transition models to pile men up at the top of an organization, particularly if the rate of growth slackens and falls below the level implicit in the recruitment and promotion rules, reflects the fact that movements are allowed to take place even if there are no vacancies for the movers to move into.

30.38. An alternative model, proposed in White (279) is based on the movements not of men but of vacancies. If a vacancy arises in a system, it will be filled either by someone already inside the system or by someone from outside. In the latter case the chain of movements is closed but in the former case a new vacancy is created and the problem of filling a vacancy arises all over again.

30.39. Thus we can base a model of movement by considering the movement of vacancies rather than the movement of men. For a stationary organization in which existing posts are not destroyed and new posts are not created, the flow of men in one direction is matched by a flow of vacancies in the opposite direction. In particular, the retirement of a man is accompanied by the appearance of a vacancy; and the recruitment of a man is accompanied by the disappearance of a vacancy. In other words, in the symbolism of chapter VII above, the whole system is driven by **d** rather than by **b** and the vacancy model is, in this case, simply the backward model of section D of that chapter with a new interpretation.

30.40. This alternative model can be illustrated from the data on the WRNS/O system contained in Forbes (71) and discussed in the preceding section. If we start from the pooled stock-flow matrix covering the eight years from the beginning of 1960 to the end of 1967 we can form, in the symbolism of section D of chapter VII above, a G'-matrix based on rows rather than on columns. From this we can form $(I - G')^{-1}$ which, in the present case, is approximately

$$(I - G')^{-1} = \begin{bmatrix} 3.480 & 3.480 & 3.480 & 3.480 \\ 0 & 6.207 & 6.207 & 6.207 \\ 0 & 0 & 7.310 & 7.310 \\ 0 & 0 & 0 & 12.854 \end{bmatrix} \qquad \text{(XXX.5)}$$

30.41. It can be seen that the non-zero elements in this matrix are constant along the rows. They have, moreover, a somewhat familiar look as can be seen by comparing them with the diagonal elements of (XXX.2). They are in fact estimates of the mean staying time in each state calculated not from the point of view of someone about to enter one of them but from the point of view of someone who has just left one of them. The estimates are fairly close until we come to state 4, in which the numbers are very small. They would have been identical had we been dealing with a system in stationary equilibrium, as can be seen from Stone (204, equations (53) and (63)).

30.42. The constancy in the rows is due to the fact that the system can only be entered at state 1 and so, on average, a leaver from any state must have spent the average amount of time in state 1; and so on for higher states. If we take a period, in this case eight years, which is short compared with the career span of the system, then every leaver during the period must have spent, on average, the average amount of time in all states up to and including the state from which he left. Consequently, if we premultiply the vector of leavers per year during the period, **d** in the symbolism of this report, by $(I - G')^{-1}$ we shall obtain an estimate of the stock vector of the system at the beginning of the period. It will only be a good estimate if the G'-matrix reflects a system approximately in stationary equilibrium.

30.43. In the present example

$$\mathbf{d} = \{21.125 \quad 9.875 \quad 2.625 \quad 1.125\} \qquad \text{(XXX.6)}$$

The initial stock vector, **n**, is

$$\mathbf{n} = \{107 \quad 81 \quad 27 \quad 13\} \qquad \text{(XXX.7)}$$

and the calculated vector, $\mathbf{n}^*$, is

$$\mathbf{n}^* = \{121 \quad 85 \quad 27 \quad 14\} \qquad \text{(XXX.8)}$$

The sum of the elements of $\mathbf{n}^*$ is greater than the sum of the elements of **n**, showing that the system was tending to grow; and the main discrepancy is in state 1, showing that the numbers in this state were unrepresentatively low at the beginning of the period.

XXXI. EXAMPLES RELATING TO HEALTH AND HEALTH SERVICES

A. Introduction

31.1. The use of mathematical models, deterministic and stochastic, in the study of epidemics is widespread, as evidenced by such works as Bailey (13, 14) and Bartlett (17). Mathematical models have been much used in cancer research, and in Armitage and Doll (7) a number of stochastic models of the carcinogenic process are described and reasons are given for the difficulty of choosing among them on the basis of empirical evidence. In Bartholomew (16, chapter 4) a continuous-time Markov model is applied to the question of survival after treatment for cancer. The work of Burch (39) on the prevalence rates of a wide range of diseases in relation to age and sex has already been mentioned, in chapter XIX above. In Cook, Doll and Fellingham (47) the relationship between the incidence of cancer and age is studied in detail, use being made of the incidence data collected by cancer registries in different parts of the world.

31.2. On the economic and administrative side, reference has already been made, in chapter XIX above, to the studies by Feldstein (66) and Grossman (90) and to the collections of papers brought together in Fuchs (76) and Hauser (93). Another aspect of health, which is related to the economy and the technologies which it uses, is the connexion between morbidity and pollution. Several studies have been made of this question, one of the more recent of which is provided in Lave and Seskin (124). The authors are concerned with the more restricted subject of the association between mortality and air pollution in the United States and, on the basis of a cross-region analysis relating to 1960 and 1961, conclude that, whatever may be the truth about an underlying causal relationship, air pollution and mortality are closely associated.

31.3. The two examples given below both relate to the organizational aspect of health problems in the particular field of mental health.

B. Referrals in a system of medical care

31.4. This example is based on Baldwin (15) and illustrates the use of models based on transition proportions and admission proportions, as described in sections C and D of chapter VII above, in tracing the movement of patients into, through and out of a system of medical care. By this term is meant a collection of hospitals, clinics, after-care organizations, specialists and practitioners of all kinds which cater for the needs of a community in some branch of medical diagnosis and treatment.

31.5. The particular branch of medical care to which this example relates is the psychiatric service system of North-East Scotland centred on Aberdeen. In Baldwin (15, table 8.1) an input-output table is given for this system which is set out in standard form in table 31.1 below.

Table 31.1. Movements of patients into, within and out of the psychiatric service system of North-East Scotland in 1965

(Number of referrals)

To \ From		Outside world	The system 1	2	3	4	5	6	7	8	9	Totals
Outside world			1628	1486	38	115	123	256	19	491	1	
The system	1 Out-patients	1989	20	7	89	46	10	87	1	2	9	2260
	2 In-patients	1159	453	136	44	248	20	197	17	113	23	2410
	3 Day-patients	7	72	63	3	7	0	4	0	10	1	167
	4 Domiciliary visits	405	0	0	0	0	1	0	0	0	0	406
	5 Domiciliary treatments	9	39	83	3	7	0	6	0	35	1	183
	6 Hospital consultations	565	1	0	0	1	0	1	0	1	0	569
	7 Other emergencies	61	0	0	0	0	0	0	0	0	0	61
	8 In-patient follow-up	4	0	729	0	0	0	0	0	0	1	734
	9 Other psychiatric	0	0	1	0	0	0	0	0	0	0	1
Totals			2213	2387	177	424	154	551	37	652	36	

Note: Components do not always add up to totals because of rounding-off errors.

31.6. A patient enters this system by being referred to one of its nine branches; and from there he may either be referred out of the system or be referred to another branch (or succession of branches) within it before he finally gets out. Thus from table 31.1 we can see that 2,260 referrals were made to the branch "out-patients", of which 1,989 were from outside the system; and that 2,213 referrals were made from the branch "out-patients", of which 1,628 were to the outside world. The remaining rows and columns provide similar information for the other branches.

31.7. By dividing the entries relating to the nine branches by the grand total for the column, we can form a C-matrix and from it derive the usual inverse, $(I-C)^{-1}$, as set out in table 31.2 below.

Table 31.2. Initial, direct and indirect referrals per 1,000 new entrants into each state of the psychiatric service system of North-East Scotland in 1965

(1,000 $(I - C)^{-1}$)

To \ From	1	2	3	4	5	6	7	8	9
1 Out-patients	1033	27	537	138	72	178	40	20	293
2 In-patients	254	1149	423	711	170	456	534	216	819
3 Day-patients	42	37	1048	44	8	27	18	23	64
4 Domiciliary visits	0	0	0	1000	6	0	0	0	0
5 Domiciliary treatment	32	60	49	57	1010	38	29	66	78
6 Hospital consultations	0	0	0	2	0	1002	0	1	0
7 Other emergencies	0	0	0	0	0	0	1000	0	0
8 In-patient follow-up	78	350	129	217	52	139	163	1066	278
9 Other psychiatric	0	0	0	0	0	0	0	0	1000
Total	1440	1624	2186	2169	1318	1841	1784	1391	2533

Note: Components do not always add up to totals because of rounding-off errors.

31.8. On the assumption that C can be interpreted as a probability matrix, table 31.2 shows the direct and indirect consequences of 1,000 referrals from outside into any branch of the system. A matrix inverse $(I - C)^{-1}$ can always be decomposed into three terms $I + C + C^2(I - C)^{-1}$ which, in the present context, relate to initial, direct and indirect referrals. Thus the entry of 1033 in row 1 and column 1 of table 31.2 can be decomposed into $1,000 + 9 + 24 = 1,033$. This means that the initial referral of 1,000 individuals to branch 1 of the system from outside generates 9 additional referrals directly and a further 24 referrals indirectly. Similarly, the entry in row 2 and column 1 can be decomposed into $0 + 205 + 49 = 254$, so that the initial referral of 1,000 individuals to branch 1 leads to 205 direct referrals and 49 indirect referrals to branch 2. By summing the entries in column 1 of table 31.2 we obtain a figure of 1,440, which indicates that if 1,000 patients are referred into the system at branch 1, then 440 additional referrals will be made before the 1,000 patients have all left the system. The same interpretation can be put on the entries in the other columns of the table.

31.9. Starting again from table 31.1, if we divide the entries relating to the nine branches in each row by the grand total for the row, we can form a G'-matrix and from it derive $(I - G')^{-1}$ as set out in table 31.3 below.

Table 31.3. Final, direct and indirect referrals per 1,000 leavers from the psychiatric service system of North-East Scotland in 1965

(1,000 $(I - G')^{-1}$)

From \ To	1	2	3	4	5	6	7	8	9
1 Out-patients	1035	235	560	1	382	3	0	233	235
2 In-patients	34	1152	534	2	763	2	0	1144	1154
3 Day-patients	43	31	1051	0	46	0	0	31	31
4 Domiciliary visits	26	125	111	1000	127	2	0	124	125
5 Domiciliary treatment	5	10	7	2	1008	0	0	10	10
6 Hospital consultations	44	105	91	0	112	1002	0	104	105
7 Other emergencies	0	8	4	0	5	0	1000	8	8
8 In-patient follow-up	6	60	91	0	233	2	0	1059	60
9 Other psychiatric	5	12	13	0	14	0	0	12	1012
Total	1198	1738	2462	1005	2690	1011	1000	2725	2740

Note: Components do not always add up to totals because of rounding-off errors.

31.10. On the assumption that G' can be interpreted as a probability matrix, table 31.3 shows the average experience within the system of 1,000 leavers from any branch of it. The nature of these entries can be seen most easily from column 7. Since we know from table 31.1 that no one is referred to branch 7 from within the system, it follows that those who leave from branch 7 have not been admitted, directly or indirectly, into any other branch. In contrast, the 1,000 who leave from branch 1 have made 198 moves within the system before they finally return to the outside world. Many of them will have gone straight in and straight out but others may have entered the system from any branch and moved around in it until they finally emerge from branch 1. The average experience of these people results in the numbers in column 1.

31.11. It should be emphasized that the flow matrix, reproduced here as table 31.1, was originally compiled to indicate the connectedness of the system and not to enable the kind of analyses set out in tables 31.2 and 31.3 to be made. It is very likely that the nine branches into which the system is divided do not define states with probabilities of movement independent of the paths along which they have been reached. However, the kind of record system which makes possible the construction of table 31.1 would also make it pos-

sible to check the suitability of any proposed set of states. This checking would have to be carried out before the results in tables 31.2 and 31.3 could be regarded as of more than methodological interest.

C. The resocialization of geriatric patients

31.12. This example is based on Meredith (139) and illustrates the use of the price equation described in section C.5 of chapter VII above.

31.13. In 1964 the Napa State Hospital, the second largest hospital in California for the mentally ill, started a programme with the object of enabling elderly patients to spend as much time as possible outside the hospital in boarding homes and the like. Such patients are often in a particularly discouraging position since their handicaps, ailments and problems tend to make them become more and more dependent on the hospital so that eventually they are unable to leave it.

31.14. Before the introduction of the Geriatric Resocialization Program, GRP for short, arrangements existed where, in favourable circumstances, elderly patients could be placed in a home outside the hospital. It was felt that if this could be done on a larger scale the old age of the patients would be more agreeable; and, further, that if the additional cost of the programme compared with the normal cost of care in a ward of the hospital was not very great, it might well happen that the finances of the hospital would be improved since the cost of being in a boarding home is much less than the cost of being in a ward.

31.15. This situation can be represented by means of a system in which the patient may be in one of four states or in the absorbing state, that is dead. The four states are: being enrolled in the GRP; being in a geriatric ward; being in a boarding home on assignment from the GRP; and being in a boarding home on assignment from a ward. Then the financial advantage, if any, of the GRP can be seen by comparing the first two elements of a vector $\tilde{\mathbf{k}}$ where, as in equation (VII.25),

$$\tilde{\mathbf{k}} = (I - \tilde{C}')^{-1}\,\mathbf{m} \qquad \text{(XXXI.1)}$$

In this application: the elements of $\mathbf{m}$ are the monthly costs of keeping a patient in one of the four states; the elements of $\mathbf{k}$ are the discounted total costs of maintaining for the rest of his life a patient now entering one of the four states; and $\tilde{C} \equiv \sigma C$. The matrix, C, contains in its columns the monthly transition probabilities from each of the four states; and $\sigma \equiv 1/(1+\rho)$, where σ is the monthly discount factor and ρ is the monthly rate of interest.

31.16. In Meredith (139) C and $\mathbf{m}$ are given as

$$C = \begin{bmatrix} 0.854 & 0.013 & 0.025 & 0 \\ 0.028 & 0.978 & 0 & 0.025 \\ 0.112 & 0 & 0.969 & 0 \\ 0 & 0.003 & 0 & 0.969 \end{bmatrix} \qquad \text{(XXXI.2)}$$

and, in dollars,

$$\mathbf{m} = \{682 \quad 655 \quad 226 \quad 226\} \qquad \text{(XXXI.3)}$$

31.17. If we look at the C-matrix we can see, first, that the column sums are all 0.994 implying a common death rate from all states of 6 per thousand a month or about 7.2 per cent a year. Second, the probability of returning from a boarding home is the same whether the assignment is made from the GRP or from a ward. Finally, the probability of assignment to a boarding home is much greater from the GRP than from a ward.

31.18. If we look at the vector $\mathbf{m}$ we can see, first, that the cost per patient in GRP is only \$27 a month more than the cost in a ward; and, second, that the cost in a boarding home is only a little over one-third of the cost in a ward.

31.19. If we put $\rho = 0$, then $\sigma = 1$ and $\tilde{C} = C$. In this case

$$(I-\tilde{C})^{-1} = \begin{bmatrix} 27.0 & 17.9 & 21.7 & 14.4 \\ 38.6 & 76.7 & 31.1 & 61.8 \\ 97.4 & 64.7 & 110.8 & 52.2 \\ 3.7 & 7.4 & 3.0 & 38.2 \end{bmatrix} \qquad \text{(XXXI.4)}$$

The numbers in the columns of (XXXI.4) measure the months that a patient who starts in one of the states can expect to spend in each state over the remainder of his life. As we can see from the column sums, the expectation of life in any state is just under 14 years.

31.20. If we work out the first two elements of $\tilde{\mathbf{k}}$, the vector of accumulated costs by means of (XXXI.1) we find that the cost per patient in the GRP is \$66,546 whereas the cost per patient in a ward is \$78,741. Thus if we do not apply discounting the net gain per patient from GRP is \$12,195.

31.21. If we do apply discounting the magnitude of the gain is changed. In order to illustrate this, let us consider an interest rate of 10 per cent a year which is equivalent to about 7.9 per thousand a month so the monthly discount factor is 0.9922. If we multiply the elements of C by this factor we find that $(I-\tilde{C})^{-1}$ is now given by

$$(I-\tilde{C})^{-1} = \begin{bmatrix} 14.6 & 6.8 & 9.4 & 4.4 \\ 14.7 & 43.0 & 9.4 & 27.6 \\ 42.1 & 19.6 & 53.0 & 12.6 \\ 1.1 & 3.3 & 0.7 & 28.1 \end{bmatrix} \qquad \text{(XXXI.5)}$$

Thus if we discount at a rate of ten per cent a year the discounted accumulated costs for the GRP and the wards are respectively \$29,349 and \$37,978, showing a net gain per patient from GRP of \$8,629. Thus the gain remains but it is reduced by discounting.

31.22. Although of no practical relevance in the present example, it is interesting to see what happens if the rate of interest is increased indefinitely. As $\rho \to \infty$, $\sigma \to 0$ and $(I-\tilde{C})^{-1} \to I$. Thus in these circumstances all costs are discounted away except those of the initial month in the initial state. Since these are \$27 higher for the GRP than for the wards it would appear that a breakeven point must be reached at some finite rate of interest after which the net gain from GRP would be converted into a loss.

31.23. The significance of this last result is that, with different relative costs and transition probabilities, the breakeven point might come within the practically relevant range of interest rates. It may even be the case that with a scheme of the kind described the net gain may not only switch but also reswitch or, indeed, change a number of times as the interest rate is increased. Thus the example shows the possible importance of deciding whether in any particular case discounting is appropriate and, if so, what rate of interest should be used.

XXXII. EXAMPLES RELATING TO PUBLIC ORDER AND SAFETY, OFFENDERS AND THEIR VICTIMS

A. Introduction

32.1. Reference has already been made in section H of chapter XX above to the papers on mathematical models in the field of criminal justice brought together in Wilkins (280). Many of these and other recent papers are concerned either with the form of certain statistical distributions or with the formulation of transition models of various kinds.

32.2. In Carr-Hill and Payne (40) a number of expected distributions of attributes or events are formulated which correspond to common criminological theories; but the authors found it impossible, with the data available, to distinguish between these theories. In Green and Martin (89) the discrimination between types of distributions is used as a means of testing whether absconders from approved schools show evidence of learning. They find that their data on the frequency of abscondings could not be accounted for by a Poisson distribution but were compatible with a negative binomial distribution. Such a distribution would in turn be compatible with a learning model but could also be generated by other models. After further analysis they conclude that there is evidence of an unequal initial absconding tendency among the boys studied but no evidence of learning.

32.3. In Blumstein and Larson (33) a Markovian model of recidivism is proposed. The examples given are illustrative and are intended to bring out some of the problems of defining and measuring recidivism. In Willmer (283) a model is proposed of new entrants to and leavers from crime and the attitude of offenders towards confessing or not to confessing past crimes. Unfortunately, the data needed to test this model cannot be obtained at present from published criminal statistics. In Petersen (164) a stochastic model is proposed of deviant behaviour among naval seamen. He brings out the facts not only that individual seamen have very different criminal tendencies but also that the different posts (establishments, ships etc.) to which they are assigned have very different tendencies to recognize deviance. In these circumstances an individual's record depends partly on his own tendencies and partly on the posts to which he is assigned.

32.4. An exception to the general lack of flow-information in criminal statistics is the information provided in Wolfgang, Figlio and Sellin (286). This study relates to the development of 9,945 youths, born in 1945 and living in Philadelphia at least since the age of ten, from their tenth birthday to their eighteenth. In this interval 3,475 of these youths committed one or more offences, 1,862 committed two or more offences and so on in a descending series until we find that 282 committed eight or more offences. A great deal of information is provided on school and social background and on the seriousness of offences, but here we shall concentrate on the analysis of offence and age transitions.

B. Offence transitions

32.5. In this analysis, offences are classified into five groups: non-index and the more serious categories, injury, theft, damage and a combination of the last three. Eight transition matrices are given which show the proportion of offenders who after offence θ, at which they committed one of the five categories of offence, either gave up committing offences (at least until after their eighteenth birthday) or, at offence $\theta + 1$, committed one of the five categories of offence. Separate matrices are given for whites and non-whites.

32.6. If we put this information in the standard form adopted in this report, we can analyse it by the method set out in section C.4(b) of chapter VII above. If from each transition matrix we leave out the proportions who desist, we can arrange the matrices of order 5 along the leading subdiagonal of a matrix of order 45. These submatrices contain the only non-zero elements in the large matrix. If, as usual, we denote the large matrix by C we can trace, by calculating $(I-C)^{-1}$, the average criminal career of a group of youths who, at offence θ, committed any one of the five categories of offence.

32.7. The eight submatrices, C_{21}, C_{32}, ..., C_{98}, are subject to error and the authors give reasons for supposing that they can be regarded as estimates of a common matrix, which means that the transition matrix from offence θ to offence $\theta + 1$ is independent of θ. If we denote this pooled matrix by C_{rs}, as in chapter VII, then the five columns of $(I-C)^{-1}$ for whites and the five for non-whites are as set out in table 32.1 below. The remainder of the large matrices, $(I-C)^{-1}$, for whites and non-whites can be filled in from the data in table 32.1. The entries in each successive set of five columns repeat those in the first five except that they are successively moved down by five rows bringing the 10,000s into a diagonal position in the large matrix.

32.8. The entries in table 32.1 can be interpreted as follows. If we start with 10,000 white youths whose first offence is a non-index offence, we can see, by adding up the entries in rows six through ten of column one, that 6,092 can be expected to commit a second offence and so 3,908 can be expected to desist after their first offence. If we add up the next batch of five entries, in rows eleven through fifteen, we can see that 3,819 of the youths can be expected to commit a third offence and so a further 2,273 can be expected to desist after their second offence. The remaining columns of the table can be interpreted in the same way.

32.9. The right-hand panel of the table provides comparable information for non-whites. It can be seen that the transition proportions are all higher than for whites and so a smaller proportion can be expected to desist and a larger proportion can be expected to continue to commit offences. Thus out of 10,000 non-whites whose first offence is a non-index offence, 7,576 can be

Table 32.1. Offence transitions: the first five columns of 10,000 $(I-C)^{-1}$ based on the pooled matrix, C_{rs}

			White offenders					Non-white offenders				
			Non-index	Injury	Theft	Damage	Combination	Non-index	Injury	Theft	Damage	Combination
			1	2	3	4	5	1	2	3	4	5
First offence	Non-index	1	10000					10000				
	Injury	2		10000					10000			
	Theft	3			10000					10000		
	Damage	4				10000					10000	
	Combination	5					10000					10000
Second offence	Non-index	6	4263	3767	3924	3735	3952	4671	4196	4154	4943	3897
	Injury	7	413	686	354	447	224	874	1000	627	1138	891
	Theft	8	862	829	2174	734	1330	1178	867	2110	1844	1396
	Damage	9	147	31	202	851	71	267	295	261	395	206
	Combination	10	407	169	568	286	1374	586	734	1134	370	1376
Third offence	Non-index	11	2527	2268	2959	2480	2861	3398	3172	3651	3892	3412
	Injury	12	251	237	285	255	260	652	620	689	739	663
	Theft	13	654	587	931	619	836	1006	921	1195	1195	1061
	Damage	14	97	78	124	146	102	204	191	218	237	203
	Combination	15	290	236	373	265	431	562	530	694	648	649
Fourth offence	Non-index	16	1579	1409	1928	1555	1854	2598	2425	2869	2994	2666
	Injury	17	156	140	189	154	180	499	466	550	574	512
	Theft	18	426	380	540	415	515	785	731	879	909	811
	Damage	19	61	54	76	64	71	156	146	172	180	160
	Combination	20	187	164	233	181	230	446	416	504	516	466
Fifth offence	Non-index	21	996	887	1225	980	1178	2000	1866	2217	2306	2050
	Injury	22	98	87	120	96	116	384	358	425	442	395
	Theft	23	271	241	336	266	323	606	565	673	699	624
	Damage	24	39	35	48	38	46	120	112	133	138	123
	Combination	25	119	105	147	116	141	345	322	384	398	356
Sixth offence	Non-index	26	629	561	775	619	745	1541	1437	1709	1777	1586
	Injury	27	62	55	76	61	73	296	276	328	341	304
	Theft	28	172	153	212	169	203	467	436	518	539	481
	Damage	29	25	22	30	24	29	92	86	103	107	95
	Combination	30	75	67	92	74	89	266	248	295	307	274
Seventh offence	Non-index	31	398	354	490	391	471	1187	1107	1317	1369	1222
	Injury	32	39	35	48	38	46	228	212	253	263	234
	Theft	33	108	97	134	107	129	360	336	399	415	370
	Damage	34	16	14	19	15	18	71	66	79	82	73
	Combination	35	47	42	58	47	56	205	191	227	236	211
Eighth offence	Non-index	36	251	224	310	247	298	914	853	1015	1055	941
	Injury	37	24	22	30	24	29	175	164	195	202	181
	Theft	38	69	61	84	67	81	277	259	308	320	285
	Damage	39	10	9	12	10	12	55	51	61	63	56
	Combination	40	30	27	37	29	35	158	147	175	182	163
Ninth offence	Non-index	41	159	142	196	156	188	705	657	782	813	725
	Injury	42	16	14	19	15	18	135	126	150	156	139
	Theft	43	43	39	53	43	51	214	199	237	246	220
	Damage	44	6	6	8	6	7	42	39	47	49	43
	Combination	45	19	17	23	19	22	122	114	135	140	125

expected to commit a second offence, 5,822 to commit a third offence and so on. By the time we reach the ninth offence the numbers are 243 for whites and 1,218 for non-whites, a ratio of 1 to 5.

32.10. If we look at rows 41 to 45 of table 32.1 we can see that the entries in the five columns for whites are very similar and that the same can be said about the entries in the columns for non-whites. What little differences there are are almost completely eliminated if we divide the column entries by their sums. This is done in table 32.2 below. This table suggests a number of conclusions.

32.11. In the first place, the probability of committing a ninth offence for an individual who has committed one offence is around five times as high for non-whites as it is for whites.

32.12. In the second place, the pattern of the ninth offence is different for the two groups. At their ninth offence, whites can be expected to commit relatively more non-index offences, about the same proportion of thefts and relatively fewer offences in the other three categories, especially injury.

32.13. In the third place, while the nature of the first offence may have some small bearing on the probability of committing a ninth offence, it has absolutely no bearing on the distribution of ninth offences within either of the two groups.

32.14. The information set out in tables 32.1 and 32.2 is based on single transition matrices, C_{rs}, obtained by pooling $C_{21}, C_{32}, \ldots, C_{98}$. Had we worked with the individual transition matrices, some of the results described would have been different. In particular, we should have found more early desistors,

Table 32.2. The distribution of ninth offences and the proportion of offenders committing them

		First offence: white				
		1	2	3	4	5
Ninth offence: white	1 Non-index	0.654	0.651	0.656	0.653	0.658
	2 Injury	0.066	0.064	0.064	0.063	0.063
	3 Theft	0.177	0.179	0.177	0.180	0.178
	4 Damage	0.024	0.028	0.027	0.025	0.024
	5 Combination	0.078	0.078	0.077	0.079	0.077
	Proportion committing ninth offence	0.024	0.022	0.030	0.024	0.029
		First offence: non-white				
		1	2	3	4	5
Ninth offence: non-white	1 Non-index	0.579	0.579	0.579	0.579	0.579
	2 Injury	0.111	0.111	0.111	0.111	0.111
	3 Theft	0.176	0.175	0.175	0.175	0.176
	4 Damage	0.034	0.034	0.035	0.035	0.034
	5 Combination	0.100	0.100	0.100	0.100	0.100
	Proportion committing ninth offence	0.122	0.114	0.135	0.140	0.125

especially among the whites. But, in the end, the differences are small: the distribution of ninth offences is not greatly affected by whether they are calculated from $(C_{98} \cdot C_{87} \cdot \ldots \cdot C_{21})$ or from C_{rs}^8. The figures are compared for offenders whose first offence was a non-index offence in table 32.3 below.

Table 32.3. Number and distribution of ninth offences expected from ten thousand offenders whose first offence was a non-index offence

		White offenders		Non-white offenders	
		Separate	Pooled	Separate	Pooled
1	Non-index	151	159	660	705
2	Injury	18	16	137	135
3	Theft	22	43	196	214
4	Damage	0	6	33	42
5	Combination	22	19	131	122
	Total	213	243	1157	1218

32.15. The successive submatrices of order 5 in either of the sets of five columns in table 32.1 are the successive terms in the series $I + C_{rs} + C_{rs}^2 + \ldots = (I - C_{rs})^{-1}$ and this inverse exists since $(I - C_{rs})$ is non-singular. Because, at each stage, some offenders desist, a finite number of offences would be committed even if the initial group of offenders lived for ever. The total number of offences and their distribution for offenders whose initial offence was in one of the five categories are set out in table 32.4 below.

32.16. The entries in the rows marked "total" in table 32.4 might be said to represent the upper bounds of an average life of crime. White offenders can be expected to commit, on average, some two and a half to three offences; and non-white offenders can be expected to commit, on average, some four to four and three quarter offences.

32.17. In the preceding paragraphs we have considered the alternative of working with separate submatrices, C_{21}, C_{32}, ..., C_{98}, or of working with a pooled submatrix, C_{rs}. These are not the only possibilities, however. If, for instance, we had reason to believe that the early submatrices, C_{21} and C_{32}, were different from the later ones which could all be pooled to form C_{rs}, then we could replace $(I - C_{rs})^{-1}$ by

$$I + C_{21} + (I - C_{rs})^{-1} C_{32} C_{21}$$

This would have the advantage of distinguishing C_{21} and C_{32}, which could be fairly well estimated, from

Table 32.4. The inverse matrices $(I-C_{rs})^{-1}$ and their column totals for white and non-white offenders

		White offenders				
		1	2	3	4	5
1	Non-index	2.107	0.985	1.214	1.043	1.187
2	Injury	0.109	1.130	0.115	0.112	0.098
3	Theft	0.268	0.245	1.455	0.249	0.356
4	Damage	0.041	0.026	0.053	1.116	0.037
5	Combination	0.121	0.086	0.157	0.105	1.242
	Total	2.646	2.472	2.994	2.625	2.920
		Non-white offenders				
		1	2	3	4	5
1	Non-index	2.938	1.792	2.034	2.188	1.894
2	Injury	0.370	1.364	0.371	0.438	0.379
3	Theft	0.561	0.498	1.711	0.699	0.599
4	Damage	0.115	0.112	0.123	1.141	0.111
5	Combination	0.310	0.308	0.400	0.327	1.404
	Total	4.294	4.074	4.639	4.793	4.387

later submatrices which, on account of the small elements of S, could not.

C. Age transitions

32.18. The authors provide age transition matrices by six-monthly intervals from the tenth to the eighteenth birthday. These matrices relate to all offenders and the entries relate to the probabilities of committing a non-index offence, an index offence (one of the other four categories) or no offence in the six-monthly interval. In this case the question of pooling does not arise and the large inverse is of order 51 and again too large to reproduce. It has, however, two striking features which call for comment.

32.19. In the first place, for early offenders, the probability of committing offences tends first to diminish then to rise and then to diminish again. For instance, out of 1,000 youths who have committed a non-index offence by the time they reach the age of ten, we can expect the following numbers to commit some type of offence in each of the years from their tenth birthday through their seventeenth: 273, 183, 248, 353, 488, 675, 762, 553. A trough is visible in their eleventh year and a peak in their seventeenth.

32.20. In the second place, the elements in any given row quickly become almost identical with the exception of the entries (in the whole matrix) at the extreme right of the row. If a closed transition matrix is raised to successively higher powers, its columns will come more and more to resemble one another and this appears to take place in the present case although no use is made of a pooled submatrix.

32.21. A feature of this example which does not seem altogether satisfactory is that youths with very different criminal histories are mixed together so that the fundamental Markov assumption that transitions depend only on the present state and are independent of past states is not likely to be satisfied by the data. If this were so, the difficulty could be overcome by the method suggested in section C.4 (*c*) of chapter VII above. For reasons connected with the size of the sample, it would be necessary to abandon six-month age groups but something could probably be done with four age groups, 10-11, 12-13, 14-15, 16-17.

ANNEX

List of references

1. ABRAMS, Mark. Subjective social indicators. In *Social Trends*, United Kingdom, Central Statistical Office, No. 4, 1973, pp. 35-50.
2. ADAMS, F. Gerard. The size of individual incomes: socio-economic variables and chance variation. *The Review of Economics and Statistics*, vol. XL, No. 4, 1958, pp. 390-8.
3. ADELMAN, Irma, and Cynthia Taft MORRIS. *Society, Politics and Economic Development: a Quantitative Approach*. The Johns Hopkins Press, Baltimore and London, 1967.
4. ————. Performance criteria for evaluating economic development potential: an operational approach. *The Quarterly Journal of Economics*, vol. LXXXII, No. 2, 1968, pp. 260-80.
5. AITCHISON, J., and J. A. C. BROWN. *The Lognormal Distribution*. Cambridge University Press, 1957.
6. ALKER, Hayward R., Karl W. DEUTSCH and Antoine H. STOETZEL. *Mathematical Approaches to Politics*. Elsevier, Amsterdam, 1973.
7. ARMITAGE, P., and R. DOLL. Stochastic models for carcinogenesis. *Proceedings of the Fourth Berkeley Symposium on Mathematical Statistics and Probability*, vol. 4, University of California Press, 1961.
8. ————, Celia PHILLIPS and Judith DAVIES. Towards a model of the upper secondary school system (with discussion). *Journal of the Royal Statistical Society, Series A (General)*, vol. 133, pt. 2, 1970, pp. 166-205.
9. ————, Cyril SMITH and Paul ALPER. *Decision Models for Educational Planning*. The Penguin Press, London, 1969.
10. ARMSTRONG, Alan. *Structural Change in the British Economy, 1948-1968*. No. 12 in *A Programme for Growth*, Chapman and Hall, London, 1974.
11. ASHFORD, J. R., and N. G. PEARSON. Who uses the health services and why? *Journal of the Royal Statistical Society, Series A (General)*, vol. 133, pt. 3, 1970, pp. 295-345.
12. AUKRUST, Odd, and Svein NORDBOTTEN. Files of individual data and their potentials for social research. *The Review of Income and Wealth*, series 19, No. 2, 1973, pp. 189-201.
13. BAILEY, Norman T. J. *The Mathematical Theory of Epidemics*. Griffin, London, 1957.
14. ————. *The Elements of Stochastic Processes*. Wiley, New York, 1964.
15. BALDWIN, J. A. *The Mental Hospital in the Psychiatric Service: A Case-Register Study*. Oxford University Press, for the Nuffield Provincial Hospitals Trust, 1971.
16. BARTHOLOMEW, D. J. *Stochastic Models for Social Processes*. Wiley, New York, 1967. Second edition, 1973.
17. BARTLETT, M. A. *Stochastic Population Models*. Methuen, London; Wiley, New York, 1960.
18. BECKER, Gary S. *Human Capital*. N.B.E.R., No. 80, general series, Columbia University Press, New York and London, 1964.
19. ————. A theory of the allocation of time. *The Economic Journal*, vol. LXXV, No. 299, 1965, pp. 493-517.
20. BELLMAN, Richard. *Dynamic Programming*. Princeton University Press, 1957.
21. BENARD, Jean. Un modèle d'affectation optimale des ressources entre l'économie et le système éducatif. *Bulletin du CEPREL*, No. 6, 1966, pp. 1-153.
22. ————. General optimization model for the economy and education. In *Mathematical Models in Educational Planning*, OECD, Paris, 1967.
23. ————, and others, Modèle d'affectation optimale des ressources entre l'économie et l'éducation: mise au point et premiers résultats du modèle d'essai. *Bulletin du CEPREL*, No. 9, 1967, pp. 1-148.
24. BENNETT, A. E., Jessie GARRAD and T. HALIL. Chronic disease and disability in the community: a prevalence study. *British Medical Journal*, 26 September 1970, pp. 762-4.
25. BENNETT, M. K. International disparities in consumption levels. *The American Economic Review*, vol. XLI, No. 4, 1951, pp. 632-49.
26. BENTZEL, Ragnar, and Herman WOLD. On statistical demand analysis from the viewpoint of simultaneous equations. *Skandinavisk Aktuarietidskrift*, vol. XXIX, No. 1/2, 1946, pp. 95-114.
27. BIRKELAND, Eva. *En Modell for Beregning av Fremtidig Studenttilgang, Studentmasse og Kandidatproduksjon i det Postgymnasiale Utdanningssystem i Norge*. The Norwegian Research Council for Science and the Humanities, Oslo, 1967.
28. ————. *A Model for Predicting Educational Enrolment and Output in the Post-Secondary Educational System of Norway*. The Norwegian Research Council for Science and the Humanities, Oslo, 1967.
29. BLAU, Peter M., and Otis Dudley DUNCAN. *The American Occupational Structure*. Wiley, New York, 1967.
30. BLAUG, Mark. *An Introduction to the Economics of Education*. Allen Lane The Penguin Press, London, 1970.
31. ————, and Maureen WOODHALL. Productivity trends in British secondary education, 1950-63. *Sociology of Education*, vol. 41, No. 1, 1968, pp. 1-35.
32. BLUMEN, I., M. KOGAN, and P. J. MCCARTHY. *The Industrial Mobility of Labor as a Probability Process*. Cornell Studies of Industrial and Labor Relations, vol. 6. Cornell University, 1955.
33. BLUMSTEIN, Arthur, and Richard C. LARSON. Problems in modeling and measuring recidivism. *Journal of Research in Crime and Delinquency*, vol. 8, No. 2, 1971, pp. 124-32.
34. BOULDING, Kenneth E. The economics of the coming spaceship earth. In *Environmental Quality in a Growing Economy*. Johns Hopkins Press, Baltimore, 1966.
35. BOWLES, Samuel. *Planning Educational Systems for Economic Growth*. Harvard University Press, 1969.
36. BRONFENBRENNER, Martin. *Income Distribution Theory*. Macmillan, London, 1971.
37. BROWN, J. A. C. *The Social Psychology of Industry*. Penguin Books, Harmondsworth, 1954.
38. BULLOCK, Nicholas and others. *Survey of Day-to-Day Activities: Tabulations and Preliminary Analyses*. Land Use and Built Forms Studies, W.P. No. 44, University of Cambridge, Department of Architecture, 1972.

39. BURCH, Philip R. J. *Growth, Disease and Ageing.* Oliver and Boyd, Edinburgh, 1968.

40. CARR-HILL, Roy A., and Clive D. PAYNE. Crime—accident or disease: an exploration using probability models for the generation of macro-criminological data. *Journal of Research in Crime and Delinquency,* vol. 8, No. 2, 1971, pp. 133-55.

41. CARVELL, I. G., and E. SWINFEN GREEN. *Criminal Law and Procedure.* Sweet and Maxwell, London, 1970.

42. CHAMPERNOWNE, D. G. The graduation of income distributions. *Econometrica,* vol. 20, 1952, pp. 591-615.

43. ———. A model of income distribution. *The Economic Journal,* vol. LXIII, 1953, pp. 318-51.

44. ———. *Estimation and Uncertainty in Economics.* 3 vols., Oliver and Boyd, Edinburgh and London, 1969.

45. ———. *The Distribution of Income between Persons.* Cambridge University Press, 1973.

46. COLEMAN, James S. Flow models for occupational structure. In *Input-Output Techniques.* North-Holland, Amsterdam, 1972.

47. COOK, P. J., Richard DOLL and S. A. FELLINGHAM. A mathematical model for the age distribution of cancer in man. *International Journal of Cancer,* vol. 4, No. 1, 1969, pp. 93-112.

48. CORREA, H., and J. TINBERGEN. Quantity adaptation of education to accelerated growth. *Kyklos,* vol. XV, No. 4, 1962, pp. 776-86.

49. DAVIE, Ronald, Neville BUTLER and Harvey GOLDSTEIN. *From Birth to Seven.* Longman Group, London, 1972.

50. DE BRUYN, J. *A Modern System of Educational Statistics: The Matrix Method.* Netherlands Central Bureau of Statistics, The Hague, 1969.

51. DENISON, Edward F. Classification of sources of growth. *The Review of Income and Wealth,* series 18, No. 1, 1972, pp. 1-25. The papers in this issue and the one which follows it are devoted to factor input and productivity.

52. DORFMAN, Robert (editor). *Measuring Benefits of Government Investments.* The Brookings Institution, Washington, 1965.

53. DOUGLAS, J. W. B. *The Home and the School.* MacGibbon and Kee, London, 1964.

54. ———, J. M. Ross and H. R. SIMPSON. The ability and attainment of short-sighted pupils. *Journal of the Royal Statistical Society, Series A (General),* vol. 130, pt. 4, 1967, pp. 479-504 and vol. 131, pt. 2, 1968, p. 229.

55. ———. *All Our Future.* Peter Davies, London, 1968.

56. DREWNOWSKI, Jan, and Wolf SCOTT. *The Level of Living Index.* United Nations Research Institute for Social Development, report No. 4, Geneva, 1966.

57. DUBLIN, Louis I., and Alfred J. LOTKA. *The Money Value of a Man.* Ronald Press, New York, 1930; revised edition, 1946.

58. ———. *Length of Life.* Ronald Press, New York, 1936.

59. DUNCAN, Otis Dudley. A socioeconomic index for all occupations. In *Occupations and Social Status.* Free Press, New York, 1961.

60. ———, David L. FEATHERMAN and Beverly DUNCAN. *Socioeconomic Background and Achievement.* Seminar Press, New York and London, 1972.

61. EHRLICH, Paul R. and Anne H. *Population, Resources, Environment.* W. H. Freeman, San Francisco, 1970.

62. ERICKSON, Charlotte. *British Industrialists: Steel and Hosiery, 1850-1950.* Cambridge University Press, 1959.

63. ERIKSEN, Tor Eiler. *En Prognosmodell för den Allmänna Tilläggspensioneringen* (in Swedish with a summary in English). Riksförsäkringsverket, Stockholm, 1973.

64. ESBERGER, Sven Erik, and Sten MALMQUIST. *A Statistical Study of the Development of Incomes* (in Swedish). Berlingska Boktryckeriet, Lund, 1972.

65. FASE, M. M. G. *An Econometric Model of Age-Income Profiles.* Rotterdam University Press, 1970.

66. FELDSTEIN, M. S. *Economic Analysis for Health Service Efficiency.* North-Holland, Amsterdam, 1967.

67. FISHER, Irving. *The Making of Index Numbers.* Houghton Mifflin Co., Boston and New York: first edition, 1922; third edition, 1927.

68. FISHER, Malcolm. *Measurement of Labour Disputes and Their Economic Effects.* OECD, Paris, 1973.

69. FLEETWOOD, BISHOP. *Chronicon Preciosum.* T. Osborne, London, 1707 and 1745.

70. FLYNN, M., P. FLYNN and N. MELLOR, Social malaise research: a study in Liverpool. *Social Trends,* No. 3, H.M.S.O., 1972, pp. 42-52.

71. FORBES, A. F. Markov chain models for manpower systems. In *Manpower and Management Science,* English Universities Press, 1971.

72. FOWLER, R. F. *Duration of Unemployment on the Register of Wholly Unemployed.* Studies in Official Statistics, Research Series No. 1, H.M.S.O., London, 1968.

73. FREJKA, Tomas. *The Future of Population Growth.* Wiley, New York, 1973.

74. FREYTAG, H. L., and C. C. von WEIZSÄCKER. *Schulwahl und Schulsystem in Baden-Württemberg.* 2 vols., Heidelberg, 1968.

75. ——— (editors), *Schulwahl und Schulsystem: Modelltheoretische Entwürfe—Verlaufsstatistische Analysen.* 2 vols., Verlag Julius Beltz, Weinheim, 1969.

76. FUCHS, Victor R. (editor). *Essays in the Economics of Health and Medical Care.* National Bureau of Economic Research, New York, 1972.

77. GALTON, Francis. *Hereditary Genius: an Inquiry into Its Laws and Consequences.* 1st edition, 1869; 2nd edition, Watts and Co., London, 1892.

78. ———, and Edgar SCHUSTER, *Noteworthy Families,* John Murray, London, 1906.

79. GIBRAT, R. Une loi des répartitions économiques. *Bulletin de la Statistique Générale de la France,* No. 19, 1930, pp. 469 et seq.

80. ———. *Les Inégalités Economiques.* Recueil Sirey, Paris, 1931.

81. GLASS, D. V. (editor). *Social Mobility in Britain.* Routledge and Kegan Paul, London, 1954.

82. ———. *Numbering the People.* D. C. Heath, Farnborough, 1973.

83. ———. *The Population Controversy.* Gregg Intl. Publishers, Farnborough, 1973.

84. ———. *The Development of Population Statistics.* Gregg Intl. Publishers, Farnborough, 1973.

85. GOLDSTONE, L. *A School Cohort Coding System.* UNESCO SS/6/72/WP2; Conf. Eur. Stats./WG.23/6, September 1965.

86. GOODMAN, L. A. Sequential sampling tagging for population size problems. *Annals of Mathematical Statistics,* vol. XXIV, 1953, pp. 59-69.

87. ———. Population growth of the sexes. *Biometrics,* IX, 1953, pp. 212-25.

88. GRAY, P. G., and R. RUSSELL. *The Housing Situation in 1960.* Central Office of Information, London, 1962.

89. GREEN, J. R., and D. N. MARTIN. Absconding from approved schools as learned behaviour: a statistical study. *Journal of Research in Crime and Delinquency,* vol. 10, No. 1, 1973, pp. 73-86.

90. GROSSMAN, Michael. *The Demand for Health: a Theoretical and Empirical Investigation.* National Bureau of Economic Research, New York, 1972.

91. HART, P. E., and S. J. PRAIS. The analysis of business concentration: a statistical approach (with discussion). *Journal of the Royal Statistical Society, Series A (General)*, vol. 119, pt. 2, 1956, pp. 150-91.

92. ———, M. A. UTTON and G. WALSHE, *Mergers and Concentration in British Industry*. Cambridge University Press, 1973.

93. HAUSER, M. M. (editor). *The Economics of Medical Care*. Allen and Unwin, London, 1972.

94. HAWTHORN, Geoffrey. *The Sociology of Fertility*. Collier-Macmillan, London, 1970.

95. HILL, T. P. An analysis of the distribution of wages and salaries in Great Britain. *Econometrica*, vol. 27, No. 3, 1959, pp. 355-81.

96. HODGE, Robert W., Paul M. SIEGEL and Peter H. ROSSI. Occupational prestige in the United States: 1925-1963. In 2nd edition of *Class, Status and Power*, Routledge and Kegan Paul, London, 1967.

97. ———, Donald J. TREIMAN and Peter H. ROSSI. A comparative study of occupational prestige. In 2nd edition of *Class, Status and Power*, Routledge and Kegan Paul, London, 1967.

98. HOEM, Jan M. A probabilistic model for primary marital fertility. *Yearbook of Population Research in Finland*, XI, 1969, pp. 73-86.

99. ———. Fertility rates and reproduction rates in a probabilistic setting. *Biométrie-Praximétrie*, vol. X, No. 1, 1969, pp. 38-66.

100. ———. Purged and partial Markov chains. *Skandinavisk Aktuarietidskrift*, vol. LII, Nos. 3-4, 1969, pp. 147-55.

101. ———. A probabilistic approach to nuptiality. *Biométrie-Praximétrie*, vol. XI, No. 1, 1970, pp. 3-19.

102. ———. Probabilistic fertility models of the life table type. *Theoretical Population Biology*, vol. 1, No. 1, 1970, pp. 12-38.

103. ———. Point estimation of forces of transition in demographic models. *Journal of the Royal Statistical Society, Series B (Methodological)*, vol. 33, No. 2, 1971, pp. 275-89.

104. ———. Inhomogeneous semi-Markov processes, select actuarial tables and duration-dependence in demography. In *Population Dynamics*. Proceedings of a Symposium conducted by the Mathematics Research Center, the University of Wisconsin, Madison, June 19-21, 1972.

105. HOLLISTER, Robinson. *A Technical Evaluation of the First Stage of the Mediterranean Regional Project*. OECD (M.R.P.), Paris, 1966.

106. HOTELLING, Harold. Analysis of a complex of statistical variables into principal components. *Journal of Educational Psychology*, vol. XXIV, 1933, pp. 417-41 and 498-520.

107. HUNGARY, CENTRAL STATISTICAL OFFICE. *The Twenty-four Hours of the Day: Analysis of 12,000 Time-budgets*. Budapest, 1965.

108. HUSÉN, Torsten (editor). *International Study of Achievement in Mathematics*. 2 vols. Almqvist and Wiksell, Stockholm, 1967.

109. INKELES, Alex., and Peter H. ROSSI. National comparisons of occupational prestige. *American Journal of Sociology*, vol. 61, No. 4, 1956, pp. 329-39.

110. INTERNATIONAL LABOUR OFFICE. *The Measurement of Underemployment: Concepts and Methods*. Geneva, 1966.

111. ———. *International Standard Classification of Occupations: Revised Edition 1968*. Geneva, 1969.

112. ———. *Technical Guide: Descriptions of Series Published in the Bulletin of Labour Statistics*. 2 vols, Geneva, 1970.

113. ———. *L'Impact macro-économique de la sécurité sociale*, Geneva, 1970.

114. ITALY, I.N.A.I.L.. *Notizie Statistiche, 1959-1961*. Servizio Statistico Attuariale, Rome, 1963.

115. JAPAN, BUREAU OF STATISTICS, OFFICE OF THE PRIME MINISTER. *Employment Status Survey: All Japan*. Bureau of Statistics, Tokyo, 1956, 1959, 1962, 1965, 1968, 1971.

116. KAHN, Robert L. The meaning of work: interpretation and proposals for measurement. In *The Human Meaning of Social Change*. Russell Sage Foundation, New York, 1972.

117. KEMENY, John G., and J. Laurie SNELL. *Finite Markov Chains*. van Nostrand, Princeton, 1960.

118. KENDALL, David G. Stochastic processes and population growth. *Journal of the Royal Statistical Society, Series B (Methodological)*, vol. XI, No. 2, 1949, pp. 230-64.

119. KEYFITZ, Nathan. Matrix multiplication as a technique of population analysis. *The Milbank Memorial Fund Quarterly*, vol. XLII, No. 4, pt. 1, 1964, pp. 68-84.

120. ———. The population projection as a matrix operator. *Demography*, vol. 1, No. 1, 1964, pp. 56-73.

121. ———. *Introduction to the Mathematics of Population*. Addison-Wesley, Reading, Mass., 1968.

122. KING, Gregory. *Natural and Political Observations and Conclusions upon the State and Condition of England*. Printed as an appendix to *An Estimate of the Comparative Strength of Great Britain* (1802) by Sir George Chalmers; and reprinted in *Two Tracts by Gregory King*, Johns Hopkins Press, Baltimore, 1936.

123. KLEVMARKEN, Anders. *Statistical Methods for the Analysis of Earnings Data. Urval* No. 6, National Central Bureau of Statistics, Stockholm, 1972.

124. LAVE, L. B., and E. P. SESKIN. Analysis of association between U.S. mortality and air pollution. *Journal of the American Statistical Association*, vol. 68, No. 342, 1973, pp. 284-90.

125. LEONTIEF, Wassily. Environmental repercussions and the economic structure: an input-output approach. In *A Challenge to Social Scientists*, ed. Shigeto Tsuru, Asahi, Tokyo, 1970. Reprinted in *The Review of Economics and Statistics*, vol. LII, No. 3, 1970, pp. 262-71.

126. LINDSAY, Walton, Robert CHEESMAN and Martha de PORZECANSKI. *New Towns: a Comparative Atlas*. Land Use and Built Form Studies, W.P. No. 62, University of Cambridge, Department of Architecture, 1972.

127. ———, *New Towns: the Data Bank, its Construction and Organisation*. Land Use and Built Form Studies, W.P. No. 63, University of Cambridge, Department of Architecture, 1972.

128. LITTLE, Ian M. D., and James A. MIRRLEES. *Manual of Industrial Project Analysis in Developing Countries*. 2 vols. plus annex, OECD, Paris, 1968.

129. LOGAN, W. P. D., and Eileen M. BROOKE. *The Survey of Sickness 1943 to 1952*. G.R.O. Studies on Medical and Population Subjects, No. 12, H.M.S.O., London, 1957.

130. LOTKA, Alfred J. *Elements of Physical Biology*. Williams and Wilkins, Baltimore, 1925. Republished as *Elements of Mathematical Biology*, Dover Publications, New York, 1956.

131. LYDALL, Harold. *The Structure of Earnings*. The Clarendon Press, Oxford, 1968.

132. MCCALL, John J. A Markovian model of income dynamics. *Journal of the American Statistical Association*, vol. 66. No. 335, 1971, pp. 439-47.

133. MCFARLAND, David D. Intragenerational social mobility as a Markov process. *American Sociological Review*, vol. 35, No. 3, 1970, pp. 463-76.

134. MCGINNIS, R. A stochastic model of social mobility, *American Sociological Review*, vol. 33, No. 5, 1968, pp. 712-22.

135. McGranahan, D. V., and others. *Contents and Measurement of Socio-Economic Development.* UNRISD, report No. 70.10, Geneva, 1970. Mimeographed.

136. Mahoney, Thomas A., and George T. Milkovich. The internal labor market as a stochastic process. In *Manpower and Management Science*, English Universities Press, 1971.

137. Marshall, Alfred. *Principles of Economics.* 8th edition, Macmillan, London, 1927.

138. Meade, J. E. *Efficiency, Equality and the Ownership of Property.* Allen and Unwin, London, 1964.

139. Meredith, Jack. A Markovian analysis of a geriatric ward. *Management Science*, vol. 19, No. 6, 1973, pp. 604-12.

140. Morris, Vera, and Adrian Ziderman. The economic return on investment in higher education in England and Wales. *Economic Trends*, No. 211, 1971, pp. xx-xxxi.

141. Moser, C. A. *Survey Methods in Social Investigation.* Heinemann, London, 1958, 1967.

142. ————. Social indicators — systems, methods and problems. *The Review of Income and Wealth*, series 19, No. 2, 1973, pp. 133-41.

143. Mustert, G. R. *The Development of the Income Distribution in the Netherlands after the Second World War.* Tilburg Institute of Economics, research memorandum 47, 1974.

144. Nerlove, Marc, and T. Paul Schultz, *Love and Life between the Censuses: a Model of Family Decision Making in Puerto Rico, 1950-1960.* The Rand Corporation, Santa Monica, 1970.

145. Netherlands, Central Bureau of Statistics. An *Educational Matrix of the Netherlands for 1967.* The Hague, 1969.

146. ————. *Development of Links between the Subsystems of the System of Demographic and Social Statistics and the S.N.A.* The Hague, 1972.

147. Neumann, John von, and Oskar Morgenstern. *Theory of Games and Economic Behavior.* Princeton University Press, 1944; 2nd edition, 1947.

148. Nordbotten, Svein. Purposes, problems and ideas related to statistical file systems. *Bulletin of the International Statistical Institute*, vol. XLII, bk. 2, 1969, pp. 733-50.

149. ————. Individual data files and their utilization in socio-demographic model building in the Norwegian Central Bureau of Statistics. *Review of the International Statistical Institute*, vol. 38, No. 2, 1970, pp. 193-201.

150. Nordhaus, William, and James Tobin. Is growth obsolete? In *Economic Growth*, Fiftieth Anniversary, Colloquium V. National Bureau of Economic Research, New York, 1972.

151. Oliver, F. R. Inter-regional migration and unemployment, 1951-1961. *Journal of the Royal Statistical Society, Series A (General)*, vol. 127, pt. 1, 1964, pp. 42-69.

152. ————. A year-by-year analysis of inter-regional migration, 1951-1961. *Journal of the Royal Statistical Society, Series A (General)*, vol. 128, pt. 2, 1965, pp. 285-7.

153. Orcutt, Guy H., and others. *Microanalysis of Socioeconomic Systems: a Simulation Study.* Harper and Brothers, New York, 1961.

154. Organisation for Economic Co-operation and Development: Mediterranean Regional Project (1965-66). Country Reports: *Greece, Italy, Portugal, Spain, Turkey, Yugoslavia.* 6 vols., Paris, 1965-66.

155. ————. *Systems Analysis for Educational Planning.* Paris, 1969.

156. ————. How to measure well-being. *The OECD Observer*, No. 64, 1973, pp. 36-7.

157. Organisation for European Economic Co-operation. *A Standardised System of National Accounts.* Paris, 1952: 1958 edition, 1959.

158. Orr, Lea. Dependence of transition proportions in the education system on observed social factors and school characteristics. *Journal of the Royal Statistical Society, Series A (General)*, vol. 135, pt. 1, 1972, pp. 74-95.

159. Panitchpakdi, Supachai. *Educational Growth and Planning in Developing Countries.* Rotterdam University Press, 1973.

160. Parenti, Giuseppe. La tecnica ed il significato dei primi numeri indice dei prezzi. *Economia* (new series), vol. XXV, No. 6, 1940, pp. 1-31.

161. Pareto, Vilfredo. *Cours d'Economie Politique.* Two vols. F. Rouge, Lausanne, 1897. Vol. 1 of the *Oeuvres complète.* Droz, Geneva, 1964.

162. Parnes, Herbert S. *Forecasting Educational Needs for Economic and Social Development.* OECD (M.R.P.), Paris, 1962.

163. Pearl, Raymond, and L. J. Reed. On the rate of growth of the population of the United States since 1790 and its mathematical representation. *Proceedings of the National Academy of Science*, vol. 6, 1920, pp. 275-88.

164. Petersen, Eggert. The conception of criminality illustrated by a stochastic process model of deviant behavior. *Journal of Research in Crime and Delinquency*, vol. 9, No. 1, 1972, pp. 31-45.

165. Piore, Michael J., and Peter B. Doeringer. *Low Income Labor Markets and Urban Manpower Programs.* Cambridge, Mass., 1969.

166. Pollard, J. H.. *Mathematical Models for the Growth of Human Populations.* Cambridge University Press, 1973.

167. Pontryagin, L. S., and others. *The Mathematical Theory of Optimal Processes.* Wiley (Interscience Publishers), New York, 1962.

168. Prais, S. J. The formal theory of social mobility. *Population Studies*, vol. IX, No. 1, 1955, pp. 72-81.

169. ————. Measuring social mobility. *Journal of the Royal Statistical Society, Series A (General)*, vol. 118, pt. 1, 1955, pp. 56-66.

170. Prest, A. R., and Turvey, R. Cost-benefit analysis: a survey. *The Economic Journal*, vol. LXXV, No. 300, 1965, 683-735.

171. Preston, Samuel H., Nathan Keyfitz and Robert Schoen. *Causes of Death: Life Tables for National Populations.* Seminar Press, New York and London, 1972.

172. Pringle, M. L. Kellmer, N. R. Butler and R. Davie. *11,000 Seven-Year-Olds.* Longmans, Green and Co., London, 1966.

173. Psacharopoulos, George. Rates of return to investment in education around the world. *Comparative Education Review*, vol. 16, No. 1, 1972, pp. 54-67.

174. Rees, P. H., and A. G. Wilson. Accounts and models for spatial demographic analysis 1: aggregate population. *Environment and Planning*, vol. 5, No. 1, 1973, pp. 61-90.

175. Revell, Jack, and others. *The Wealth of the Nation.* Cambridge University Press, 1967.

176. ————, and Alan R. Roe. National balance sheets and national accounting—a progress report. *Economic Trends*, No. 211, 1971, pp. viii-xix.

177. Richardson, Lewis F. *Generalized Foreign Politics: a Study in Group Psychology.* The British Journal of Psychology Monograph Supplements XXIII, 1939.

178. ————. *Statistics of Deadly Quarrels.* Quadrangle Books, Chicago, 1960.

179. ROE, Alan R. *The Financial Interdependence of the Economy, 1957-1966.* No. 11 in *A Programme for Growth,* Chapman and Hall, London, 1971.

180. RUGGLES, Nancy and Richard. *The Design of Economic Accounts.* National Bureau of Economic Research, New York, 1970.

181. RUSSETT, Bruce M. and others. *World Handbook of Political and Social Indicators.* Yale University Press, New Haven, 1964. Second edition by C. L. Taylor and M. C. Hudson, 1972.

182. RUTTER, Michael, Jack TIZARD and Kingsley WHITMORE. *Education, Health and Behaviour.* Longman Group, London, 1970.

183. SCHULTZ, T. Paul. An economic model of family planning and fertility. *Journal of Political Economy,* vol. 77, No. 2, 1969, pp. 153-80.

184. SCHULZ, James H. The future economic circumstances of the aged: a simulation projection, 1980. *Yale Economic Essays,* vol. 7, No. 1, 1967.

185. SELLIN, Thorsten, and Marvin E. WOLFGANG. *The Measurement of Delinquency.* Wiley, New York, 1964.

186. SHELDON, Eleanor Bernert, and Wilbert E. MOORE (editors). *Indicators of Social Change.* Russell Sage Foundation, New York, 1968.

187. SHONFIELD, Andrew, and Stella SHAW (editors). *Social Indicators and Social Policy.* Heinemann, London, 1972.

188. SIEGEL, Irving H. The generalized 'ideal' index-number formula. *Journal of the American Statistical Association,* vol. 40, No. 232, 1945, pp. 520-3.

189. SILLITOE, K. K. *Planning for Leisure.* H.M.S.O., London, 1969.

190. SONQUIST, J. A., and J. N. MORGAN. *The Detection of Interaction Effects.* Monograph No. 35, Survey Research Centre, Institute of Social Research, University of Michigan, 1964.

191. SPILERMAN, Seymour. The analysis of mobility processes by the introduction of independent variables into a Markov chain. *American Sociological Review,* vol. 37, No. 3, 1972, pp. 277-94.

192. ———. Extensions of the mover-stayer model. *American Journal of Sociology,* vol. 78, No. 3, 1972, pp. 599-626.

193. STOCKS, Percy. *Sickness in the Population of England and Wales in 1944-1947.* G.R.O. Studies on Medical and Population Subjects, No. 2, H.M.S.O., London, 1949.

194. STONE, Richard. *Quantity and Price Indexes in National Accounts.* OEEC, Paris, 1956.

195. ———. A comparison of the economic structure of regions based on the concept of distance. *Journal of Regional Science,* vol. 2, No. 2, 1960. Reprinted in *Mathematics in the Social Sciences and Other Essays,* Chapman and Hall, London, 1966.

196. ———. A model of the educational system. *Minerva,* vol. III, No. 2, 1965, pp. 172-86. Reprinted in *Mathematics in the Social Sciences and Other Essays,* Chapman and Hall, London, 1966.

197. ———. Spending and saving in relation to income and wealth. *L'industria,* No. 4, 1966, pp. 471-99. Reprinted in *Mathematical Models of the Economy and Other Essays,* Chapman and Hall, London, 1970.

198. ———. *Mathematical Models of the Economy and Other Essays.* Chapman and Hall, London, 1970.

199. ———. *Demographic Accounting and Model Building.* OECD, Paris, 1971.

200. ———. The evaluation of pollution: balancing gains and losses. *Minerva,* vol. X, No. 3, 1972, pp. 412-25.

201. ———. The fundamental matrix of the active sequence. In *Input-Output Techniques,* North-Holland, Amsterdam, 1972.

202. ———. Demographic growth and the cost of education. Cambridge, 1972. To be published.

203. ———. A system of social matrices. *The Review of Income and Wealth,* ser. 19, No. 2, 1973, pp. 143-66.

204. ———. Transition and admission models in social demography. *Social Science Research,* vol. 2, No. 2, 1973, pp. 185-230.

205. ———. Personal spending and saving in postwar Britain. In *Economic Structure and Development* (ed. H. C. Bos, H. Linneman and P. de Wolff). North-Holland, Amsterdam; American Elsevier, New York; 1973.

206. ———. Demographic variables in the economics of education. Cambridge, 1973. To be published.

207. ———, and Giovanna. *National Income and Expenditure.* 9th edition, Bowes and Bowes, London, 1972.

208. STUART, Bruce C., and Lee A. BAIR. *Health Care and Income.* Michigan Department of Social Services, research paper No. 5, 1971.

209. SZALAI, Alexander. Trends in comparative time-budget research. *The American Behavorial Scientist,* vol. 9, No. 9, 1966, pp. 3-8; also *Ekistics,* vol. 24, No. 144, 1967, pp. 384-9.

210. ———. *The Use of Time.* Mouton, The Hague/Paris, 1972.

211. THATCHER, A. R. The distribution of earnings of employees in Great Britain (with discussion). *Journal of the Royal Statistical Society, Series A (General),* vol. 131, pt. 2, 1968, pp. 133-80.

212. ———. Year-to-year variations in the earnings of individuals. *Journal of the Royal Statistical Society, Series A (General),* vol. 134, pt. 3, 1971, pp. 374-82.

213. THEIL, Henri. Best linear index numbers of prices and quantities. *Econometrica,* vol. 28, No. 2, 1960, pp. 464-80.

214. THOMPSON, Jean. The growth of population to the end of the century. In *Social Trends,* UKCSO 1970- , No. 1, pp. 21-32.

215. THONSTAD, Tore. *Education and Manpower.* Oliver and Boyd, Edinburgh and London, 1969.

216. THURSTONE, L. L. *Multiple-Factor Analysis.* The University of Chicago Press, 1947.

217. TINBERGEN, Jan, H. C. Bos and others. *Econometric Models of Education.* OECD, Paris, 1965.

218. TOMLINSON, Janet, and others. *A Model of Daily Activity Patterns: Development and Sample Results.* Land Use and Built Forms Studies, W.P. No. 43, University of Cambridge, Department of Architecture, 1971.

219. ———. A model of students' daily activity patterns. *Environment and Planning,* vol. 5, No. 2, 1973, pp. 231-66.

220. TUCK, Mary G. The effect of different factors on the level of academic achievement. To be published in *Social Science Research.*

221. TUGAULT, Yves. Migrations internes en France de 1954 à 1962, selon l'importance des localités. *Population,* vol. 22, No. 3, 1967, pp. 453-82.

222. UNITED KINGDOM CENTRAL STATISTICAL OFFICE. *Standard Industrial Classification.* First published, 1948; revised 1958; revised again, 1968. H.M.S.O., London, 1948, 1958 and 1968.

223. ———. *National Income and Expenditure.* H.M.S.O., London, annually.

224. ———. *Economic Trends.* H.M.S.O., London, monthly.

225. ———. *Statistical News.* H.M.S.O., London, quarterly.

226. ———. *Social Trends.* H.M.S.O., London, annually.

227. ———. *Qualified Manpower in Great Britain: the 1966 Census of Population.* Studies in Official Statistics, No. 18, H.M.S.O., London, 1971.

228. UNITED KINGDOM, DEPARTMENT OF EDUCATION AND SCIENCE. *Output Budgeting for the Department of Education and Science.* Education Planning Paper, No. 1, H.M.S.O., London, 1970.

229. ———, DEPARTMENT OF EMPLOYMENT. *Department of Employment Gazette* (formerly *Ministry of Labour Gazette*). H.M.S.O., London, monthly.

230. ———. *Family Expenditure Survey.* H.M.S.O., London, annually.

231. ———. *British Labour Statistics: Historical Abstract, 1886-1968.* H.M.S.O., London, 1971.

232. ———, DEPARTMENT OF HEALTH AND SOCIAL SECURITY. *Digest of Health Statistics for England and Wales.* H.M.S.O., London, annually.

233. ———, EAST ANGLIA ECONOMIC PLANNING COUNCIL. *East Anglia: a Study.* H.M.S.O., London, 1968.

234. ———, GENERAL REGISTER OFFICE. *Registrar General's Statistical Review of England and Wales.* Pt. II, H.M.S.O., London, 1966.

235. ———, HOME OFFICE. *Criminal Statistics: England and Wales, 1968.* Cmnd. 4098. H.M.S.O., London, 1969, and annually.

236. ———, MINISTRY OF HEALTH. *Hospital Costing Returns: Year Ended 31st March, 1968.* H.M.S.O., London, 1968, and annually.

237. ———, OFFICE OF POPULATION CENSUSES AND SURVEYS. *The General Household Survey: Introductory Report.* H.M.S.O., London, 1973.

238. UNITED NATIONS, CONFERENCE OF EUROPEAN STATISTICIANS. *European Programme for National Population Censuses.* Conf. Eur. Stats., WG 6/8, Geneva, 1959.

239. ———, ECONOMIC COMMISSION FOR AFRICA. *Report of the Seventh Session of African Statisticians, 13-22 October, 1971.* Mimeographed, E/CN.14/547.

240. ———, ECONOMIC COMMISSION FOR ASIA AND THE FAR EAST. *Report of the Working Group on Social Statistics, 27 September–6 October 1971.* ASTAT/WGSS/12. Mimeographed.

241. ———, ECONOMIC COMMISSION FOR EUROPE. *Report of the Second Session of a Working Party on a System of Demographic and Social Statistics.* Conf. Eur. Stats./WG.34/7, 24 May 1971. Mimeographed.

242. ———. *Report of the Third Session of a Working Party on a System of Demographic and Social Statistics.* Conf. Eur. Stats./WG.34/11, 31 May 1972. Mimeographed.

243. ——— and WORLD HEALTH ORGANIZATION. *Health and Medical Care in the Social Accounts, Demographic and Economic.* Conf. Eur. Stats./WG.36/4 and WG.36/4 Add.1, 10 February 1971. Mimeographed.

244. ———. *Report of Meeting on Health Statistics, 29 March–2 April 1971.* Conf. Eur. Stats./WG.36/6, 26 April 1971. Mimeographed.

245. ———, ECONOMIC COMMISSION FOR LATIN AMERICA. Informe del Grupo de Trabajo Sobre un Sistema de Estadisticas Demograficas y Sociales, E/CN.12/948, 28 December 1972, Santiago, mimeographed.

246. ———, POPULATION DIVISION. *World Population Prospects as Assessed in 1963.* Population studies, No. 41. New York, 1966. Sales No. 66.XIII.2.

247. ———. *World Population Prospects, as Assessed in 1968.* New York, 1973, Sales No. 72.XIII.4.

248. ———, Statistical Commission. *Official Records of the Economic and Social Council, Fiftieth Session, Supplement No. 2* (Statistical Commission, Report of the Sixteenth Session, 5-15 October 1970), New York, 1970.

249. ———, *Official Records of the Economic and Social Council, Fifty-fourth Session, Supplement No. 2* (Statistical Commission, Report of the Seventeenth Session, 13-14 November 1972), New York, 1973.

250. ——— and ECONOMIC COMMISSION FOR EUROPE. *European Recommendations for the 1970 Housing Censuses.* Conference of European Statisticians: Statistical Standards and Studies, No. 15. New York, 1969.

251. ———, STATISTICAL OFFICE. *Demographic Yearbook.* New York, annually.

252. ———. *A System of National Accounts and Supporting Tables.* Studies in Methods, series F, No. 2, New York, 1953; rev. 1, 1960, Sales No. 59. XVII.11; rev. 2, 1964, Sales No. 64.XVII.5.

253. ———. *Yearbook of National Accounts Statistics.* New York, annually.

254. ———. *International Standard Industrial Classification of All Economic Activities.* Statistical papers, series M, No. 4, rev. 2. New York, 1968, Sales No. 68.XVII.8.

255. ———. *A System of National Accounts.* Studies in methods, series F, No. 2, rev. 3. New York, 1968, Sales No. 69.XVII.3.

256. ———. *An Integrated System of Demographic, Manpower and Social Statistics and its Links with the System of National Economic Accounts.* E/CN.3/394, 1970. Mimeographed.

257. ———. *Report of the First Session: Expert Group on a System of Demographic, Manpower and Social Statistics.* E/CN.3/416, 11 August 1970. Mimeographed.

258. ———. *The Proposed Balance Sheet and Revaluation Accounts of the System of National Accounts (SNA).* E/CN.3/398 and E/CN.3/398/Add.1, New York, 1970. Mimeographed.

259. ———. *A System of Demographic, Manpower and Social Statistics: Series, Classifications and Social Indicators.* ST/STAT.49, April 1971. Mimeographed.

260. ———. *A Draft System of Statistics of the Distribution of Income, Consumption and Accumulation.* E/CN.3/425, 3 February 1972. Mimeographed.

261. ———. *A System of Demographic and Social Statistics.* E/CN.3/432, 1972. Mimeographed.

262. ———. *Towards a System of Social and Demographic Statistics (Preliminary version).* ST/STAT.68, 24 July 1973. Mimeographed.

263. ———. *Report of Expert Group on a System of Social and Demographic Statistics on its Second Session held from 23 to 27 April 1973.* ST/STAT.69, New York, 1973. Mimeographed.

264. ———. *The Proposed Balance-Sheet and Reconciliation Accounts of the System of National Accounts (SNA).* ST/STAT.70, New York, 1973. Mimeographed.

265. UNESCO. *Statistical Yearbook,* Paris, annually from 1948.

266. ———. *International Standard Classification of Education.* ISCED I. Rev., pts. 1 and 2. Paris, 1972. Mimeographed.

267. ———. *A Statistical Study of Wastage at School.* Paris, 1972.

268. UNITED STATES CONGRESS. *The Analysis and Evaluation of Public Expenditures: the PPB System.* 3 vols., U.S. Government Printing Office, Washington, 1969.

269. UNITED STATES DEPARTMENT OF HEALTH, EDUCATION AND WELFARE. *Work in America.* U.S. Department of Health, Education and Welfare, Washington, 1972.

270. VANDOME, Peter. Aspects of the dynamics of consumer behaviour. *Bulletin of the Oxford University Institute of Statistics,* vol. 20, No. 1, 1958, pp. 65-105.

271. VERHULST, P. F. Notice sur la loi que la population suit dans son accroissement. *Correspondance Mathématique et Physique Publiée par A. Quetelet*, tome X, 1838, pp. 113-21.

272. VOLTERRA, Vito. Variazioni e fluttuazioni del numero d'individui in specie animali conviventi. *Memorie della Regia Accademia Nazionale dei Lincei*, vol. CCCXXIII, No. 2, 1926.

273. ———. *Leçons sur la Théorie Mathématique de la Lutte pour la Vie*. Gauthier-Villars, Paris, 1931.

274. WALL, W. D., and H. L. WILLIAMS. *Longitudinal Studies and the Social Sciences*. Heinemann, London, 1970.

275. WALSH, H. G., and Alan WILLIAMS. *Current Issues in Cost-Benefit Analysis*. C.A.S. Occasional Papers, No. 11. H.M.S.O., London, 1969.

276. WALTERS, A. A. *An Introduction to Econometrics*. Macmillan, London, 1968.

277. WEIZSÄCKER, C. C. von. Training policies under conditions of technical progress: a theoretical treatment. In *Mathematical Models in Educational Planning*. OECD, Paris, 1967.

278. WEST, D. J. *Present Conduct and Future Delinquency*. Heinemann, London, 1969.

279. WHITE, Harrison C. *Chains of Opportunity*. Harvard University Press, 1970.

280. WILKINS, Leslie T. (editor). Papers on mathematical models in the field of criminal justice (by various authors). *Journal of Research in Crime and Delinquency*, vol. 8, No. 2, 1971, and vol. 9, No. 1, 1972.

281. WILKINSON, R. K. House prices and the measurement of externalities. *The Economic Journal*, vol. 83, No. 329, 1973, pp. 72-86.

282. WILLIAMS, Alan. *Output Budgeting and the Contribution of Micro-economics to Efficiency in Government*. C.A.S. Occasional Papers, No. 4. H.M.S.O., London, 1967.

283. WILLMER, M. A. P. On the estimation of the number of persons entering and leaving crime annually. *Journal of Research in Crime and Delinquency*, vol. 8, No. 2, 1971, pp. 175-81.

284. WILSON, A. G. *Entropy in Urban and Regional Modelling*. Pion, London, 1970.

285. ———. Papers on mathematical demography (by various authors). *Environment and Planning*, vol. 5, No. 1, 1973 (special issue).

286. WOLFGANG, Marvin E., Robert M. FIGLIO and Thorsten SELLIN. *Delinquency in a Birth Cohort*. The University of Chicago Press, 1972.

287. WOODHALL, Maureen, and Mark BLAUG. Productivity trends in British university education, 1938-62. *Minerva*, vol. III, No. 4, 1965, pp. 483-98.

288. WOOLF, Myra. *The Housing Survey in England and Wales, 1964*. H.M.S.O., London, 1967.

289. WORLD HEALTH ORGANIZATION. *Measurement of Levels of Health*. Technical Report Series, No. 137. Geneva, 1957.

290. ———. *Eighth Report of the Expert Committee on Health Statistics*. Technical Report Series, No. 261. Geneva, 1963.

291. ———. *Manual of the International Statistical Classification of Diseases, Injuries and Causes of Death*. 2 vols. Geneva, 1967.

292. ———. *Statistical Principles in Public Health Field Studies*. Technical Report Series, No. 510. Fifteenth report of the WHO Expert Committee on Health Statistics. Geneva, 1972.

293. WRIGLEY, E. A. (editor). *Identifying People in the Past*. Edward Arnold, London, 1973.

كيفية الحصول على منشورات الامم المتحدة

يمكن الحصول على منشورات الامم المتحدة من المكتبات ودور التوزيع في جميع انحاء العالم . استعلم عنها من المكتبة التي تتعامل معها أو اكتب الى : الامم المتحدة ،قسم البيع في نيويورك او في جنيف .

如何购取联合国出版物

联合国出版物在全世界各地的书店和经售处均有发售。请向书店询问或写信到纽约或日内瓦的联合国销售组。

HOW TO OBTAIN UNITED NATIONS PUBLICATIONS

United Nations publications may be obtained from bookstores and distributors throughout the world. Consult your bookstore or write to: United Nations, Sales Section, New York or Geneva.

COMMENT SE PROCURER LES PUBLICATIONS DES NATIONS UNIES

Les publications des Nations Unies sont en vente dans les librairies et les agences dépositaires du monde entier. Informez-vous auprès de votre libraire ou adressez-vous à : Nations Unies, Section des ventes, New York ou Genève.

КАК ПОЛУЧИТЬ ИЗДАНИЯ ОРГАНИЗАЦИИ ОБЪЕДИНЕННЫХ НАЦИЙ

Издания Организации Объединенных Наций можно купить в книжных магазинах и агентствах во всех районах мира. Наводите справки об изданиях в вашем книжном магазине или пишите по адресу: Организация Объединенных Наций, Секция по продаже изданий, Нью-Йорк или Женева.

COMO CONSEGUIR PUBLICACIONES DE LAS NACIONES UNIDAS

Las publicaciones de las Naciones Unidas están en venta en librerías y casas distribuidoras en todas partes del mundo. Consulte a su librero o diríjase a: Naciones Unidas, Sección de Ventas, Nueva York o Ginebra.

Printed in U.S.A.
38209—April 1975—3,400

Price: $U.S. 9.00
(or equivalent in other currencies)

United Nations publication
Sales No. E.74.XVII.8
ST/ESA/STAT/SER.F/18